TABLE OF CONTENTS

1st EDITION **OCTOBER 1, 1983**

525W PEANUT COMBINE

SECTION		PAGE
1.	HEADER SECTION	3
2.	FRAME SECTION	5
3.	WHEEL & AXLE SECTION	6
4.	PTO DRIVE ASSEMBLY SECTION	7
5.	COVER AND SHIELD SECTION	9
6.	FRONT CYLINDER SECTION	11
7.	MIDDLE & REAR CYLINDER SECTION	13
8.	CONCAVE & AUTOMATIC ADJUSTING SECTION	15
9.	CLEANING FAN SECTION	17
10.	CLEANING SHOE SECTION	19
11.	STRAW RACK SECTION	21
12.	STEMMER SECTION	23
13.	PNEUMATIC CONVEYOR SECTION	25
14.	BASKET SECTION	27
15.	BASKET FRAME SECTION	29
16.	DRIVE SECTION & FLANGETTE BEARINGS, LEFT SIDE	30,31
17.	DRIVE SECTION & FLANGETTE BEARINGS, RIGHT SIDE	32,33
18.	BAGGER ATTACHMENT (OPTIONAL)	35
19.	VINE-SPREADER KIT SECTION	37
	NUMERICAL PARTS INDEX	38,39,40,41
	WARRANTY	

NOTE

THE WORDS "LEFT" AND "RIGHT" USED IN THE DESCRIPTION OF PARTS SHOULD BE TAKEN AS SEEN FACING THE DIRECTION OF TRAVEL OF THE MACHINE.

Owners Name _____

Address _____

Model No. _____ • **Serial No.** _____ • **Date Purchased** _____

HOBBS® Hobbs-Adams engineering company

1100 Holland Road Suffolk, Va. 23434 U.S.A. • 804-539-0231

Home Office: TELX·823-600 Cabel·HOADEN SUFK

Branch Office

1701 S. Slappey Blvd. Albany, Ga. 31706 · 912 - 439-2217

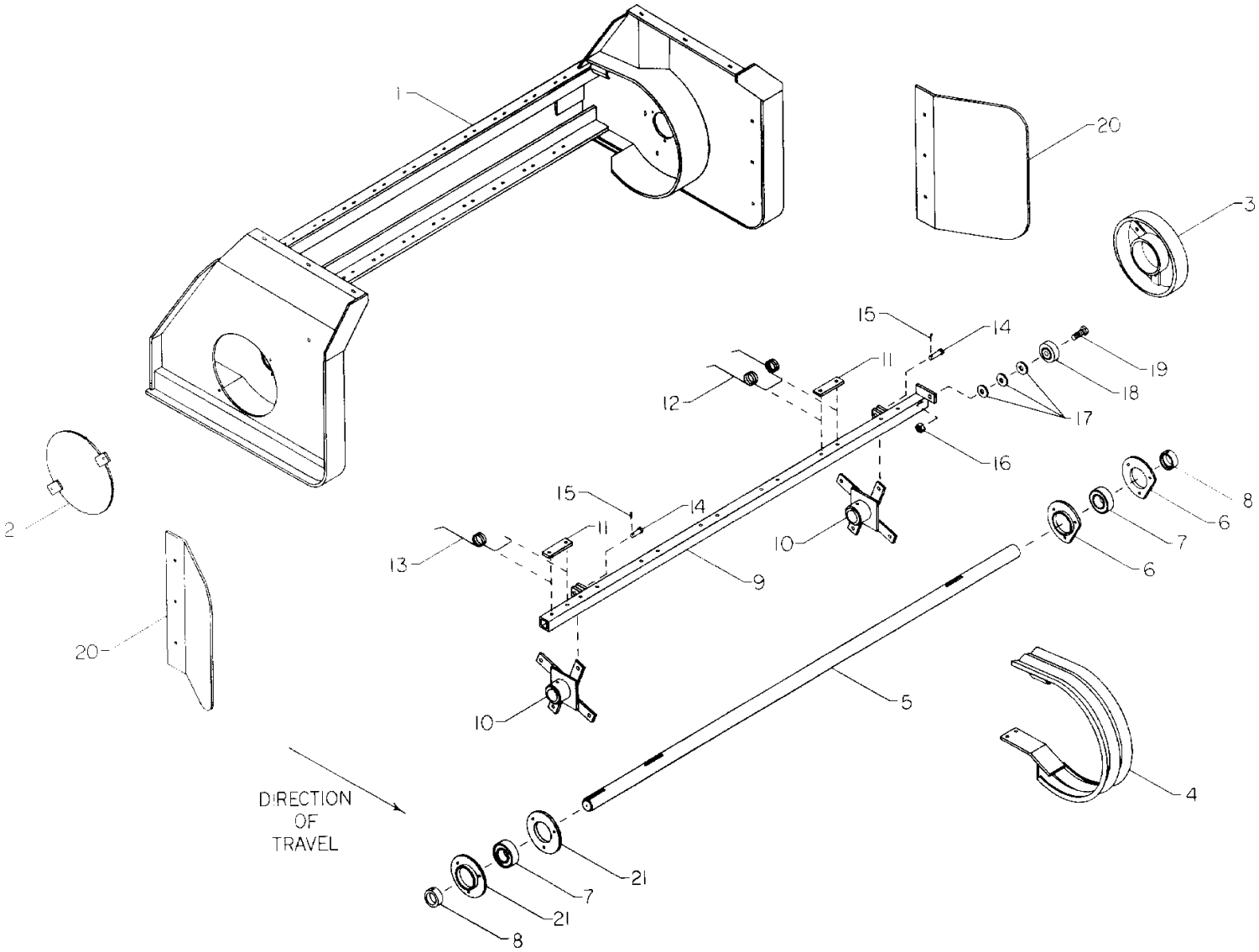
1
20
3
15
14
19
11
18
12
17
16
2
15
14
8
11
6
7
13
10
9
6
20
10
5
4
DIRECTION
OF
TRAVEL
21
7
21
8

1. HEADER SECTION

NO.	PART NO.	KEYWORD	DESCRIPTION	NO. REQ'D
1	90049	FRAME	HEADER ASSEMBLY	1
2	121406	SHIELD	HEADER END	1
3	9528	TRACK	ROLLER	1
4	12610	BAND	HEADER	12
5	10223	SHAFT	HEADER	1
6	3104	FLANGETTE	62 MS SPECIAL 1-3/16"	2
7	3096	INSERT	1-3/16 REPLACEMENT BEARING	1
8	3005	COLLAR	1-3/16 ECCENTRIC LOCKING	1
9	60178	BAR	HEADER	4
10	6099	ROTOR	BAR MOUNTING	2
11	6303	TIGHTENER	SPRING	28
12	7028	SPRING	HEADER PICK-UP	24
13	7049	SPRING	HEADER END	4
14	1009	PIN	3/8DIA.X1-3/32LG. CLEVIS	8
15	2214	PIN	1/8X3/4 COTTER	8
16	6124944	NUT	5/8-18 SAE JAM	4
17	6131016	WASHER	5/8 SAE FLAT	12
18	3010	BEARING	5/8 RADIAL	4
19	2490	SCREW	5/8-18X1-1/2LG. WITH 1/4"HEAD	4
20	121407	GUIDE	VINE	OPT

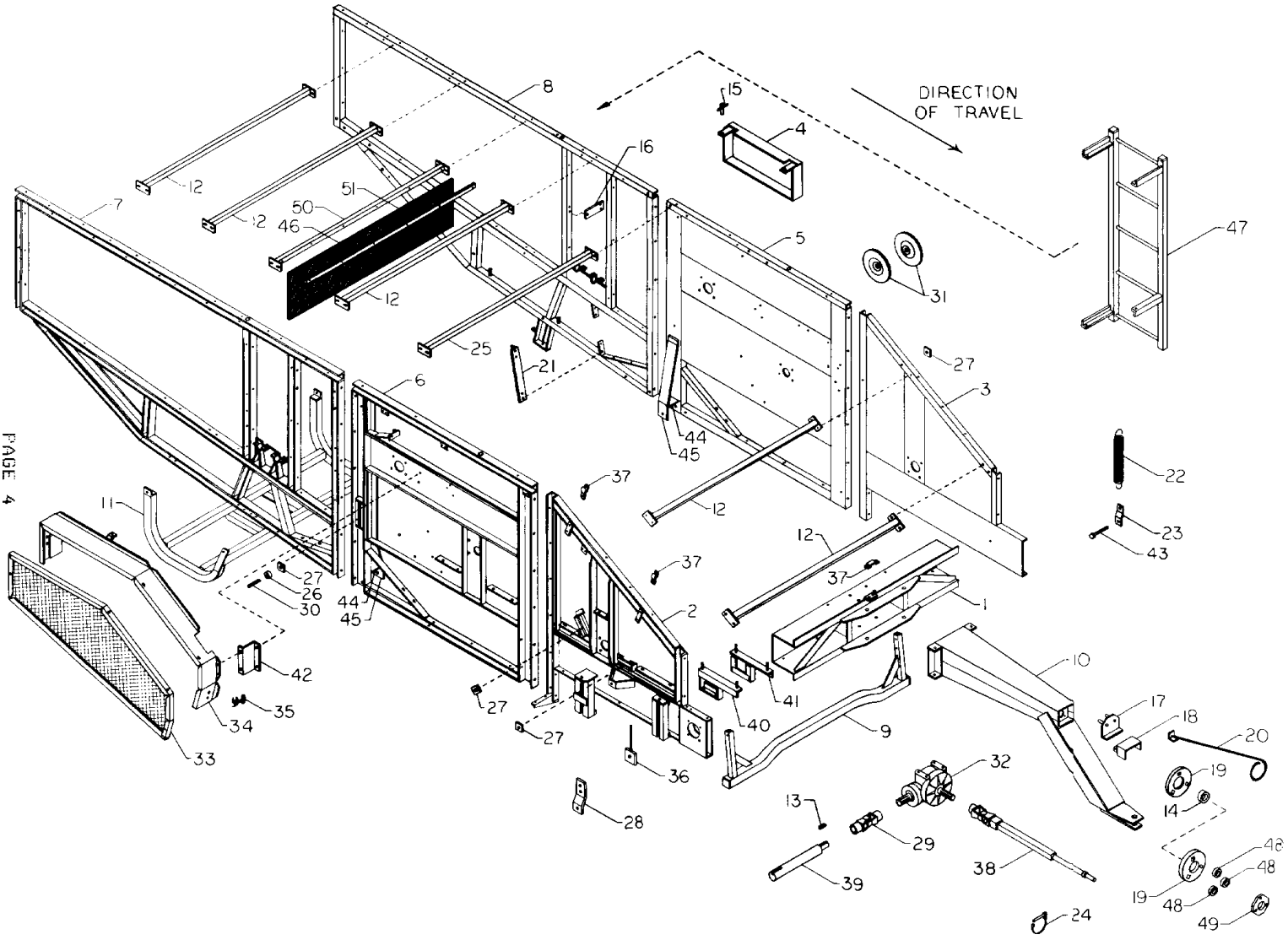
DIRECTION
OF TRAVEL
1
2
3
4
5
6
7
8
9
10
11
12
13
14
15
16
17
18
19
20
21
22
23
24
25
26
27
28
29
30
31
32
33
34
35
36
37
38
39
40
41
42
43
44
45
46
47
48
49
50
51

2. FRAME SECTION

NO.	PART NO.	KEYWORD	DESCRIPTION	NO. REQ'D
1	9517AA	FRONT	FRAME SECTION, GEARBOX MOUNTING	1
2	9347	FRAME	RIGHT FRONT SIDE SECTION	1
3	9346	FRAME	LEFT FRONT SIDE SECTION	1
4	120468	SHIELD	STEMMER SAW BELT	1
5	9707	FRAME	MIDDLE SECTION, LEFT	1
6	9708	FRAME	MIDDLE SECTION, RIGHT	1
7	9709	FRAME	REAR SECTION, RIGHT	1
8	9710	FRAME	REAR SECTION, LEFT	1
9	9523	JACK	STAND	1
10	9501	TONGUE	ASSEMBLY	1
11	9513	GUARD	DUCT	1
12	9524	BAR	TOP SUPPORT, FRONT & REAR	5
13	1147	KEYSTOCK	5/16 X 2-1/2	1
14	3097	INSERT	1-3/8 REPLACEMENT BEARING	1
---	3077	COLLAR	1-3/8 ECCENTRIC LOCKING	1
15	2083	HANDLE	SHIELD LOCKING	2
16	6905	MOUNT	FASTENER ATTACHING	1
17	9530	COUPLER	HYDRAULIC HOSE TONGUE MOUNT	1
18	9531	SHIELD	CONNECTION	1
19	3091	FLANGETTE	72 MS FOR 1-3/8 BEARING	2
20	6063	HOLDER	HYDRAULIC LINE	1
21	9526	ANGLE	BRACE	1
22	7012	SPRING	JACK LIFT	1
23	6308	CONNECTOR	JACK STAND SPRING	1
24	2050	PIN	UNIVERSAL DRIVE LOCK	1
25	9353	BAR	TOP CENTER SUPPORT	1
26	2032	SPACER	21/32 ID X 7/16 LONG IDLER	1
27	2020	NUT	5/8 UNC	5
28	90050	MOUNT	IDLER	1
29	11022	JOINT	UNIVERSAL	1
30	1395	ROD	IDLER MOUNTING	1
31	6749	SHIELD	IDLER DISC	2
32	11050	GEARBOX	1.47 - 1, 90 DEGREE	1
33	120478	SHIELD	RIGHT REAR	1
34	120477	MOUNT	DRIVE SHIELD, RIGHT REAR	1
35	7024	HOOK	SPRING LOADED	2
36	60179	ADJUSTER	SCREW	1
37	6064	CLAMP	HYDRAULIC LINE	3
38	11021	SHAFT	MAIN DRIVE & UNIVERSAL JOINT	1
39	10058	SHAFT	GEARBOX OUTPUT	1
40	6261	MOUNT	HYDRAULIC PUMP, RIGHT	1
41	6262	MOUNT	HYDRAULIC PUMP, LEFT	1
42	6748	MOUNT	REAR SHIELD	1
43	G180185	SCREW	1/2-13 X 2-1/2 USS CAP	1
44	9350P	FLAT	HORIZ. REINF. (WELD WHEN ATT'G. AXLE)	2
45	9350Q	FLAT	VERT. REINF. (WELD WHEN ATT'G. AXLE)	2
46	6727	TIGHTENER	FLAP	1
47	9848	LADDER	COMBINE	1
48	2274	SPACER	BEARING PLATE	3
49	120999	PLATE	TONGUE BEARING	1
50	9750	BAR	FLAP MOUNTING	1
51	4305	FLAP	RETAINING	1

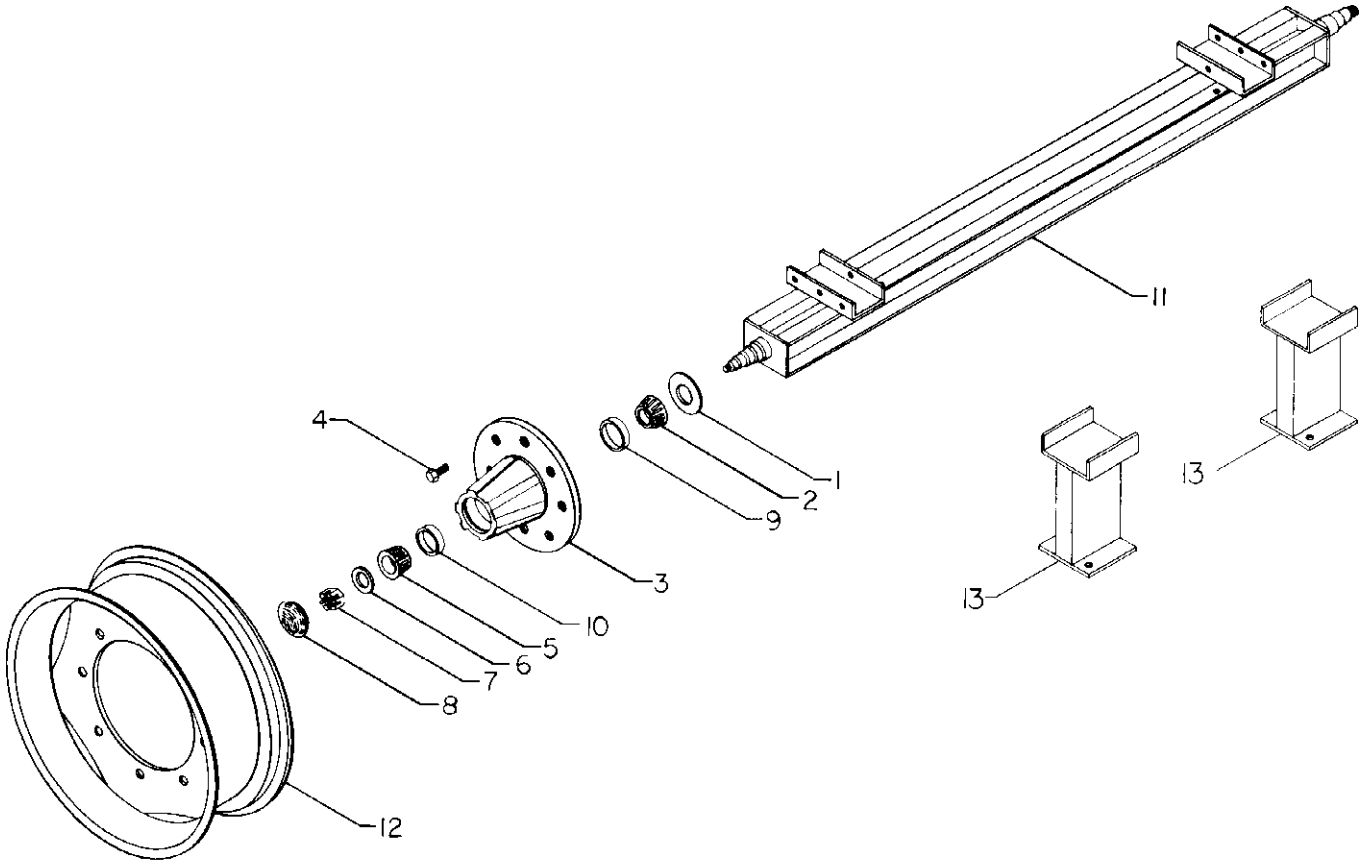

3. WHEEL & AXLE SECTION

NO.	PART NO.	KEYWORD	DESCRIPTION	NO. REQ'D
1	8015	SEAL	.....	2
2	8013	CONE	BEARING, #25590	2
3	8012	HUB	CUP ASSEMBLY	2
4	8017	BOLT	LUG	16
5	8014	CONE	BEARING, #25877	2
6	8018	WASHER	SPINDLE	2
7	8019	NUT	CASTLE	2
8	8016	CAP	HUB	2
9	8039	CUP	BEARING INNER, #25520	2
10	8040	CUP	BEARING OUTER, #25821	2
11	9348	AXLE	COMBINE	1
12	8021	WHEEL	9" X 24"	2
--	8022	TIRE	900 X 24 RIB IMPLEMENT	2
--	8023	TUBE	900 X 24 IMPLEMENT	2
13	9679	BRACE	AXLE, (USE ONLY FOR EXPORT CRATING)	A/R

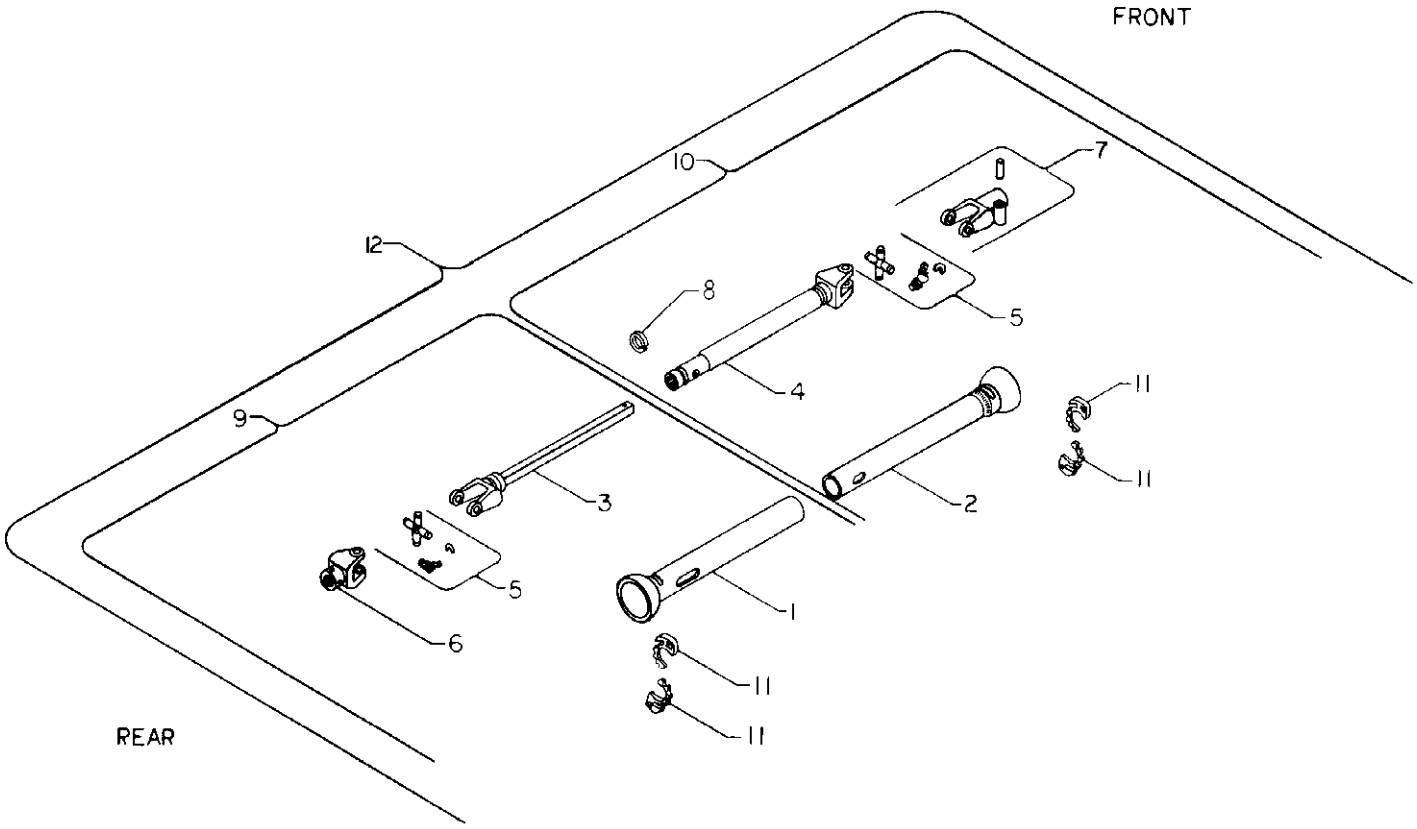

4. PTO DRIVE ASSEMBLY SECTION

NO.	PART NO.	KEYWORD	DESCRIPTION	NO. REQ'D
1	11083	SLEEVE	BELL HOUSING, OUTER	1
2	11084	SLEEVE	BELL HOUSING, INNER	1
3	11085	YOKE	SHAFT AND SLEEVE ASSEMBLY	1
4	11086	YOKE	TUBE AND SLEEVE ASSEMBLY	1
5	11014	JOURNAL	SPIDER REPAIR KIT	2
6	11015A	YOKE	REAR	1
7	11013A	YOKE	FRONT (USE WITH 545 RPM SETUP ONLY)	1
--	11058	YOKE	FRONT (USE WITH 1000 RPM SETUP ONLY)	1
8	11087	BEARING	TUBE & SLEEVE ASS'Y., NYLON	1
9	11088	PTO	MALE DRIVE LINE SECTION COMPLETE	A/R
10	11089	PTO	FEMALE DRIVE LINE SECTION COMPLETE	A/R
11	11090	BEARING	SLEEVE ATTACHING, NYLON	4
12	11082	PTO	COMPLETE DRIVE ASSEMBLY (545 RPM SETUP)	A/R
--	11091	PTO	COMPLETE DRIVE ASSEMBLY (1000 RPM SETUP)	A/R

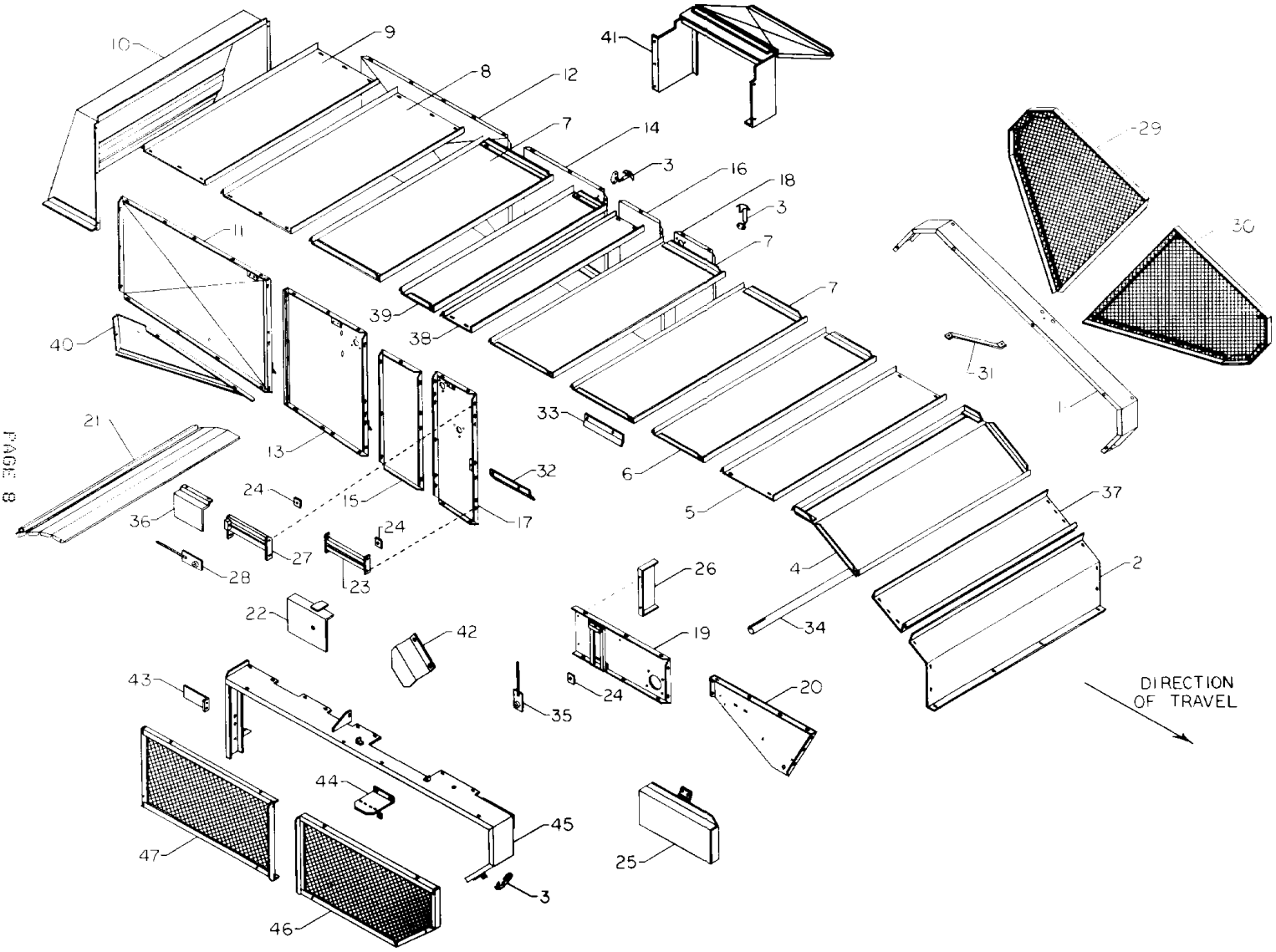
10
9
8
12
41
7
14
3
16
18
3
7
29
30
11
39
38
7
40
31
1
21
33
13
32
6
24
15
5
37
36
24
17
27
4
2
28
23
26
22
42
19
34
43
24
20
35
DIRECTION
OF TRAVEL
44
45
47
25
3
46

5. COVER AND SHIELD SECTION

NO.	PART NO.	KEYWORD	DESCRIPTION	NO. REQ'D
1	12892	SHIELD	TOP SECTION	1
2	120453	TOP	1ST SECTION	1
3	7024	HOOK	SPRING LOADED	25
4	12889	TOP	3RD SECTION	1
5	12586	TOP	4TH SECTION	1
6	12890	SHIELD	5TH SECTION	1
7	12891	TOP	6TH, 7TH & 10TH SECTION	3
8	12589	TOP	11TH SECTION	1
9	12590	TOP	12TH SECTION	1
10	120718	HOOD	REAR ASSEMBLY	1
11	12877	COVER	REAR STRAW RACK SIDE, RIGHT	1
12	12878	COVER	REAR STRAW RACK SIDE, LEFT	1
13	12875	COVER	FRONT STRAW RACK SIDE, RIGHT	1
14	12876	COVER	FRONT STRAW RACK SIDE, LEFT	1
15	120638	COVER	STRAW RACK DRIVE SIDE, RIGHT	1
16	120639	COVER	STRAW RACK DRIVE SIDE, LEFT	1
17	120296	COVER	STRIPPER CYLINDER SIDE, RIGHT	1
18	120297	COVER	STRIPPER CYLINDER SIDE, LEFT	1
19	12867	COVER	BOTTOM SIDE, RIGHT	1
---	12868	COVER	BOTTOM SIDE, LEFT	1
20	12865	COVER	LOWER SIDE, RIGHT	1
---	12866	COVER	LOWER SIDE, LEFT	1
21	12880	DEFLECTOR	LIGHT CHAFF	1
22	120472	SHIELD	RIGHT SIDE IDLER	1
23	6670	BRACKET	BELT ADJUSTER	1
24	6054	NUT	IDLER ADJUSTING	4
25	120473	SHIELD	HEADER DRIVE	1
26	12883	DEFLECTOR	DIRT	2
27	6264	BRACKET	BELT ADJUSTER	1
28	6134	ADJUSTER	SCREW AND PLATE BELT	1
29	12894	SHIELD	CYLINDER DRIVE CHAIN, REAR SECTION	1
30	12893	SHIELD	CYLINDER DRIVE CHAIN, FRONT SECTION	1
31	6260	BRACE	CYLINDER DRIVE, TOP SECTION	1
32	120304	DEFLECTOR	RIGHT	1
33	120305	DEFLECTOR	LEFT	1
34	10051	SHAFT	CYLINDER	1
35	6598	ADJUSTER	SCREW & PLATE BELT	1
36	120379	SHIELD	DIRT	1
37	120454	TOP	2ND SECTION	1
38	120455	TOP	8TH SECTION	1
39	120456	TOP	9TH SECTION	1
40	120745	COVER	LOWER RIGHT REAR SIDE	1
---	120746	COVER	LOWER LEFT REAR SIDE	1
41	120469	SHIELD	STRAW WALKER DRIVE	1
--	121102	SHIELD	STRAW WALKER DRIVE, WITH VINE SPREADER	OPT
42	120470	SHIELD	PNEUMATIC CONVEYOR DRIVE	1
43	120471	SHIELD	CLEANING FAN	1
44	6750	MOUNT	FASTENER	1
45	120474	MOUNT	DRIVE SHIELD, FRONT RIGHT	1
46	120475	SHIELD	FORWARD RIGHT DRIVE	1
47	120476	SHIELD	REARWARD RIGHT DRIVE	1

See pages 30-33 for sheaves, sprockets, keys, bearings, flangettes, collars, belts, and chains.

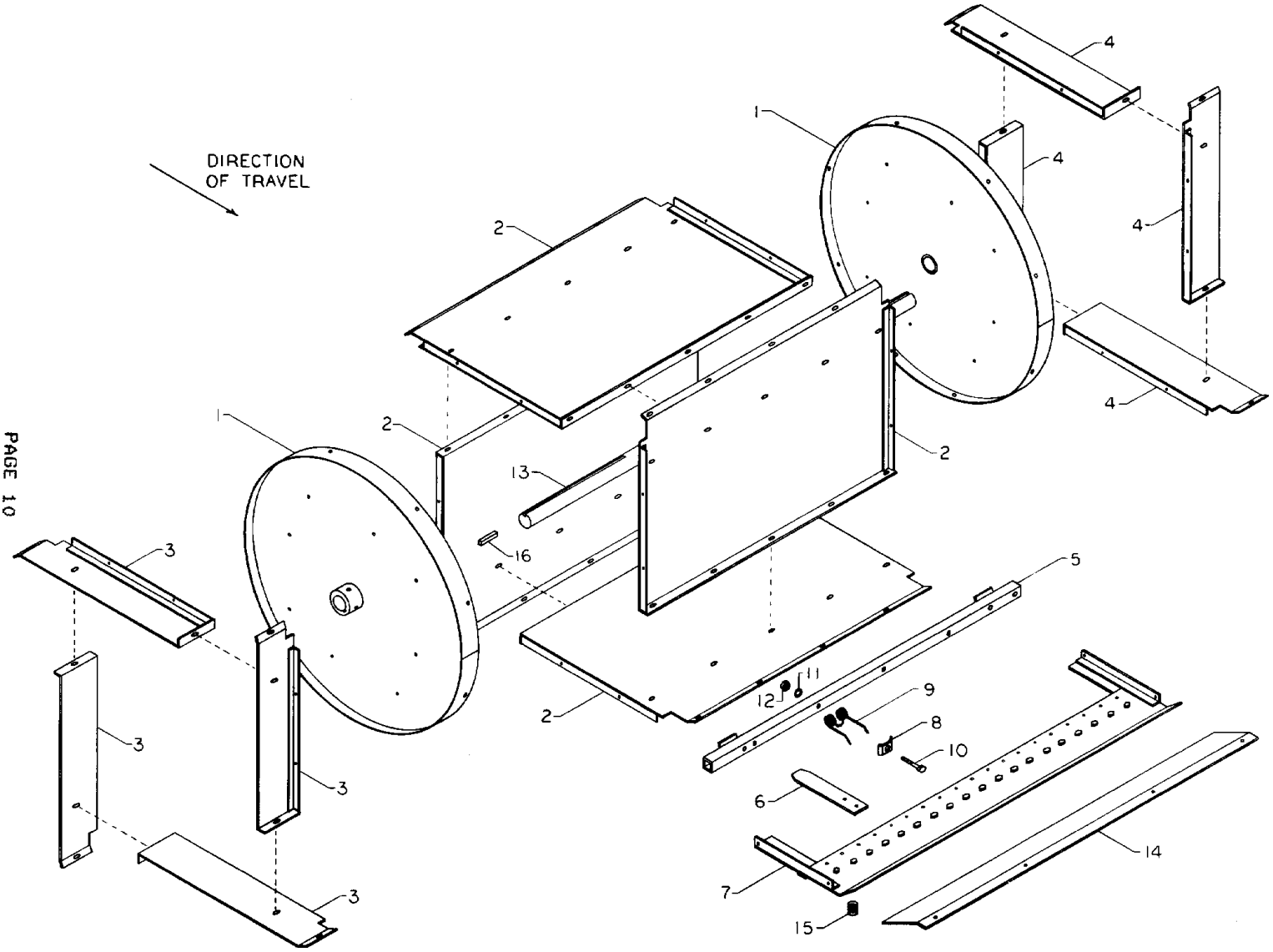
DIRECTION
OF TRAVEL
1
2
3
4
5
6
7
8
9
10
11
12
13
14
15
16

6. FRONT CYLINDER SECTION

NO.	PART NO.	KEYWORD	DESCRIPTION	NO. REQ'D
1	5153	HEAD	CYLINDER	2
2	12832	BOARD	CENTER CYLINDER SECTION	4
3	12833	BOARD	RIGHT CYLINDER SECTION	4
4	12834	BOARD	LEFT CYLINDER SECTION	4
5	6097	BAR	FRONT CYLINDER	8
6	6170	GUIDE	VINE	19
7	12835	FRAME	VINE GUIDE ASSEMBLY	1
8	6047	RETAINER	PICKING SPRING	40
9	7008	SPRING	PICKING	40
10	6180157	SCREW	7/16-14 X 2-1/2 USS CAP	56
11	6120383	LOCKWASHER	7/16	56
12	6271501	NUT	7/16-14 USS HEX	56
13	10047	SHAFT	CYLINDER	1
14	12836	DEFLECTOR		1
15	7003	SPRING	VINE GUIDE RETAINING	19
16	1215	KEYSTOCK	3/8 X 2-1/2	2

See pages 30-33 for sprockets, keys, bearings, flangettes, collars, and chains.

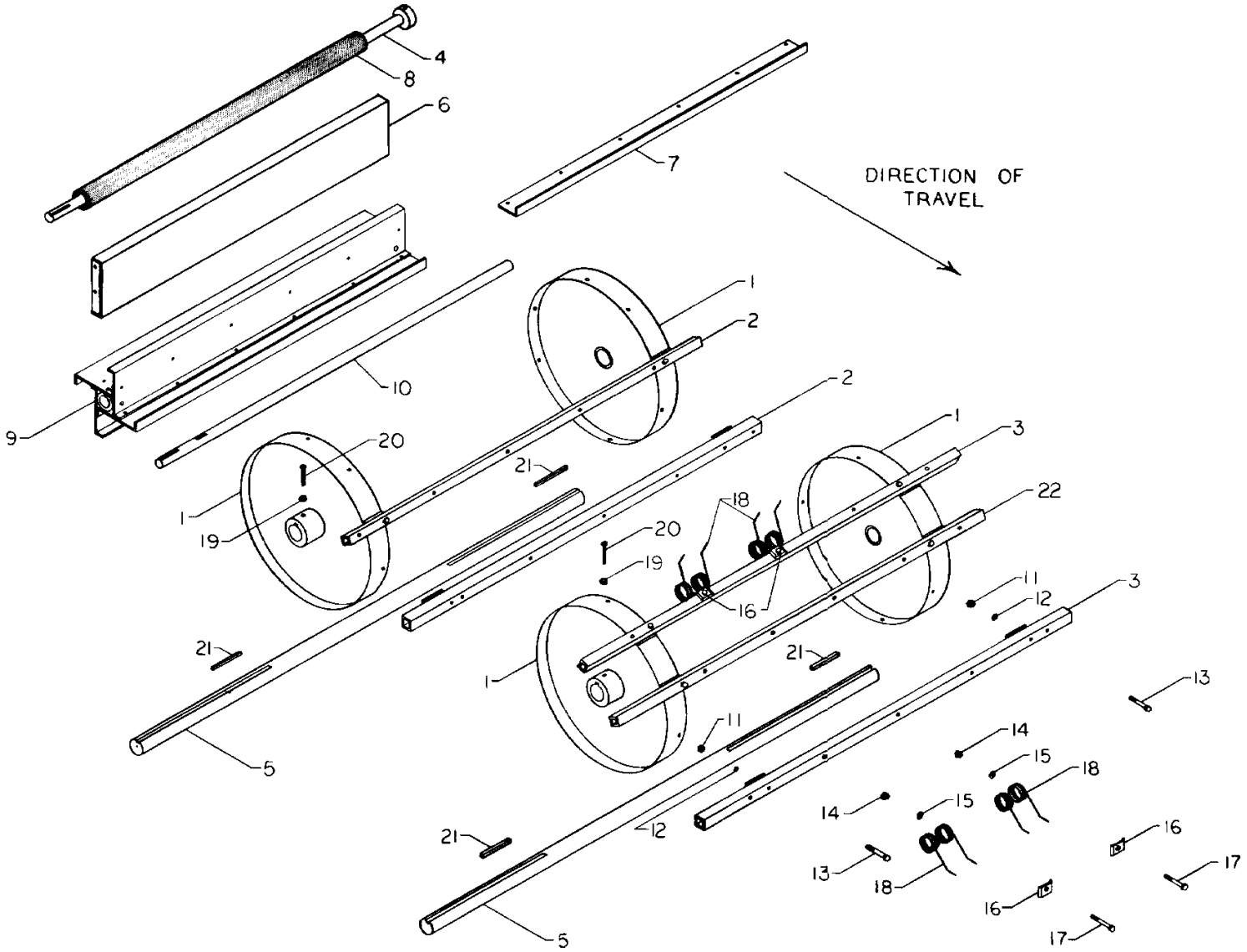
DIRECTION OF TRAVEL
1
2
3
4
5
6
7
8
9
10
11
12
13
14
15
16
17
18
19
20
21
22

7. MIDDLE AND REAR CYLINDER SECTION

NO.	PART NO.	KEYWORD	DESCRIPTION	NO. REQ'D
1	5327	HEAD	CYLINDER	4
2	6097	BAR	#2 CYLINDER	10
3	6095	BAR	#1 CYLINDER; FOR 5 SPRINGS	5
4	10101	SHAFT	CLEANING SHOE OSCILLATION DRIVE	1
5	10047	SHAFT	CYLINDER	2
6	12837	DEFLECTOR		1
7	120008	BLADE	REINFORCEMENT	4
8	2095	SLEEVE	CLEANING SHOE DRIVE SHAFT	1
9	5376	CYLINDER	STRIPPER	1
10	10142	SHAFT	STRIPPER CYLINDER	1
11	6271501	NUT	7/16-14 USS HEX	40
12	6120383	LOCKWASHER	7/16	40
13	6180157	SCREW	7/16-14 X 2-1/2 USS CAP	40
14	6271501	NUT	7/16-14 USS HEX	100
15	6120383	LOCKWASHER	7/16	100
16	6047	RETAINER	PICKING SPRING	100
17	6180157	SCREW	7/16-14 X 2-1/2 USS CAP	100
18	7008	SPRING	PICKING	100
19	6120378	NUT	1/2-13 USS HEX	4
20	6180177	SCREW	1/2-13 X 1-1/2 USS	4
21	1215	KEYSTOCK	3/8 X 2-1/2	4
22	6479	BAR	#1 CYLINDER; FOR 5 SPRINGS	5

See pages 30-33 for sheaves, sprockets, keys, bearings, flangettes, collars, belts, and chains.

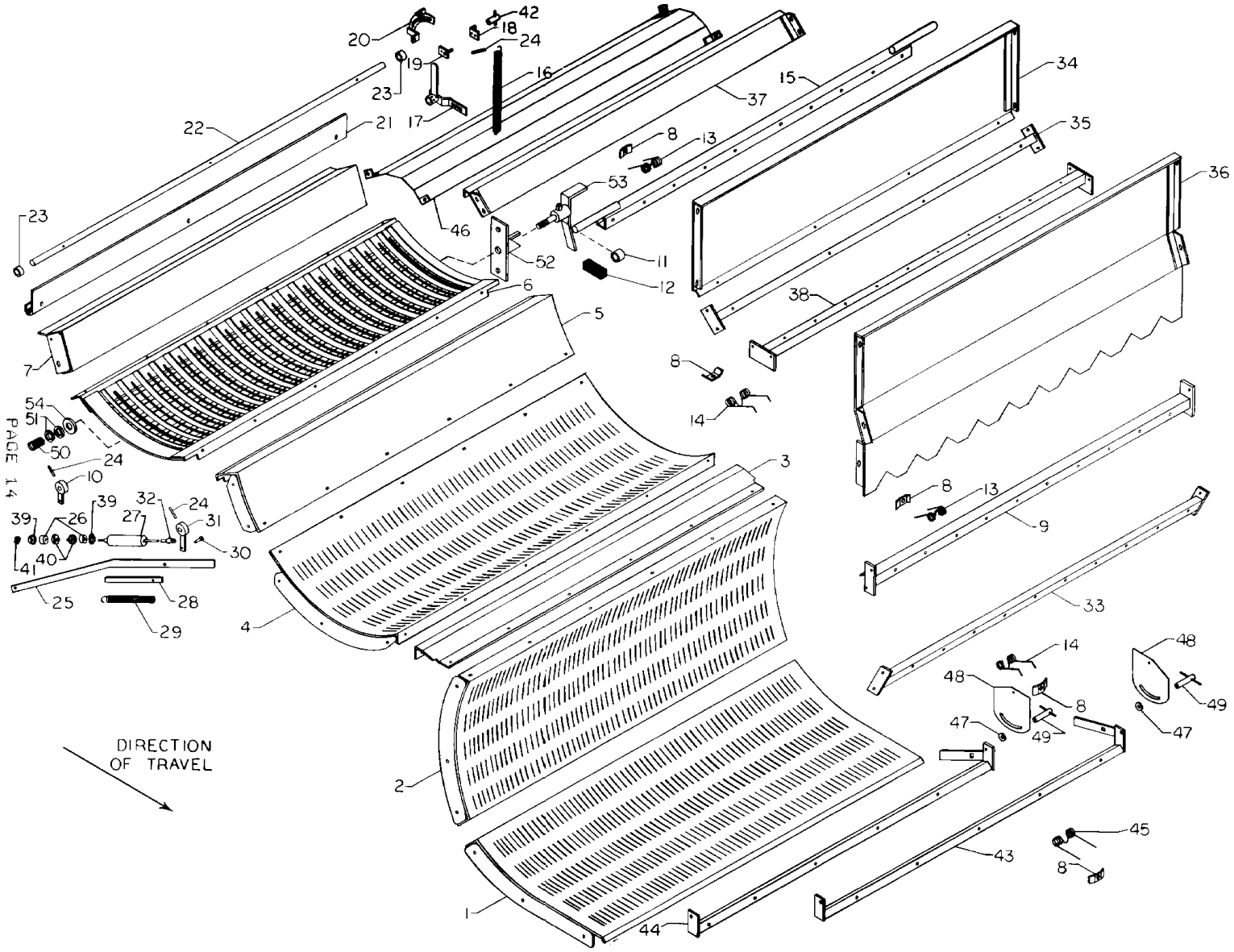
DIRECTION
OF TRAVEL

8. CONCAVE AND AUTOMATIC ADJUSTING SECTION

NO.	PART NO.	KEYWORD	DESCRIPTION	NO. REQ'D
1	12823	CONCAVE	1ST SECTION	1
2	12824	CONCAVE	2ND SECTION	1
3	12827	PLATE	CONCAVE ATTACHING, MIDDLE FRONT	1
4	12825	CONCAVE	3RD SECTION	1
5	12828	FRAME	CONCAVE ATTACHING, MIDDLE REAR	1
6	121050	CONCAVE	SEPARATOR, ADJUSTABLE	1
7	12826	FRAME	SEPARATOR, CONCAVE ATTACHING	1
8	6047	RETAINER	PICKING SPRING	50
9	9516	BAR	DEFLECTOR SPRING MOUNTING	1
10	6083	LEVER	AUTOMACTIC ADJUSTING	1
11	2037	SPACER	LOAD SENSOR BAR	2
12	4264	BLOCK	WEAR	2
13	7018	SPRING	DOUBLE TORSION, STRAIGHT LEG	20
14	7008	SPRING	DOUBLE TORSION, CROOKED LEG, PICKING	20
15	6165	BAR	LOAD SENSING SPRING MOUNTING	1
16	7013	SPRING	PICKING, CONTROL ADJUSTING	1
17	6094	HANDLE	PICKING, CONTROL ADJUSTING	1
18	9511	STOP	CONTROL HANDLE	1
19	9512	RETAINER	CONTROL HANDLE STOP	1
20	6081	BRACKET	HANDLE STOP QUADRANT	1
21	6084	BOARD	PICKING CONTROL	1
22	6078	SHAFT	PICKING CONTROL BOARD	1
23	2038	SPACER	PICKING CONTROL BOARD SHAFT	2
24	2015	PIN	SPRING ROLL, 1/4 X 1-3/4	3
25	6168	LINKAGE	AUTOMACTIC PICKING CONTROL, SECONDARY	1
26	4076	BUSHING	CONTROL CYLINDER ATTACHING	2
27	14006	ABSORBER	PICKING CONTROL	1
28	6080	LINKAGE	AUTOMATIC PICKING CONTROL, PRIMARY	1
29	7019	SPRING	AUTOMATIC ADJUSTING LINK OVERRIDE	1
30	2042	PIN	CLEVIS, 3/8 X 1-3/32	1
31	6082	LEVER	PICKING CONTROL DRIVE CRANK	1
32	2041	CLEVIS	3/8 SAE	1
33	6166	BAR	PICKING SPRING MOUNTING, STATIONARY	1
34	120605	DIVIDER	THIRD STAGE, PICKING	1
35	6167	BAR	DIVIDER STIFFENING	1
36	12830	DIVIDER	SECOND STAGE, PICKING	1
37	12831	GUARD	LOAD SENSOR	1
38	6819	BAR	STRIPPER	1
39	2053	RETAINER	RUBBER GROMMET	2
40	2052	LOCATOR	RUBBER GROMMET	2
41	6120369	NUT	3/8 SAE	2
42	2164	LOCK	PICKING CONTROL BOARD ADJUSTMENT	1
43	6816	BAR	BREAST SPRING, LOWER	1
44	6817	BAR	BREAST SPRING, UPPER	1
45	7038	SPRING	BREAST	10
46	120601	DEFLECTOR	BOARD	1
47	2218	SPACER	BAR, SHORT	A/R
---	2217	SPACER	BAR, LONG	A/R
48	6868	BRACKET	BAR ADJUSTER	2
49	6821	LOCK	BAR	2
50	7040	SPRING	ADJUSTABLE CONCAVE	1
51	6120396	WASHER	1/2 SAE FLAT	2
52	6929	CAM	CONCAVE ADJUSTER	1
53	6930	HANDLE	CONCAVE ADJUSTER	1
54	2281	WASHER	CONCAVE ADJUSTER	1

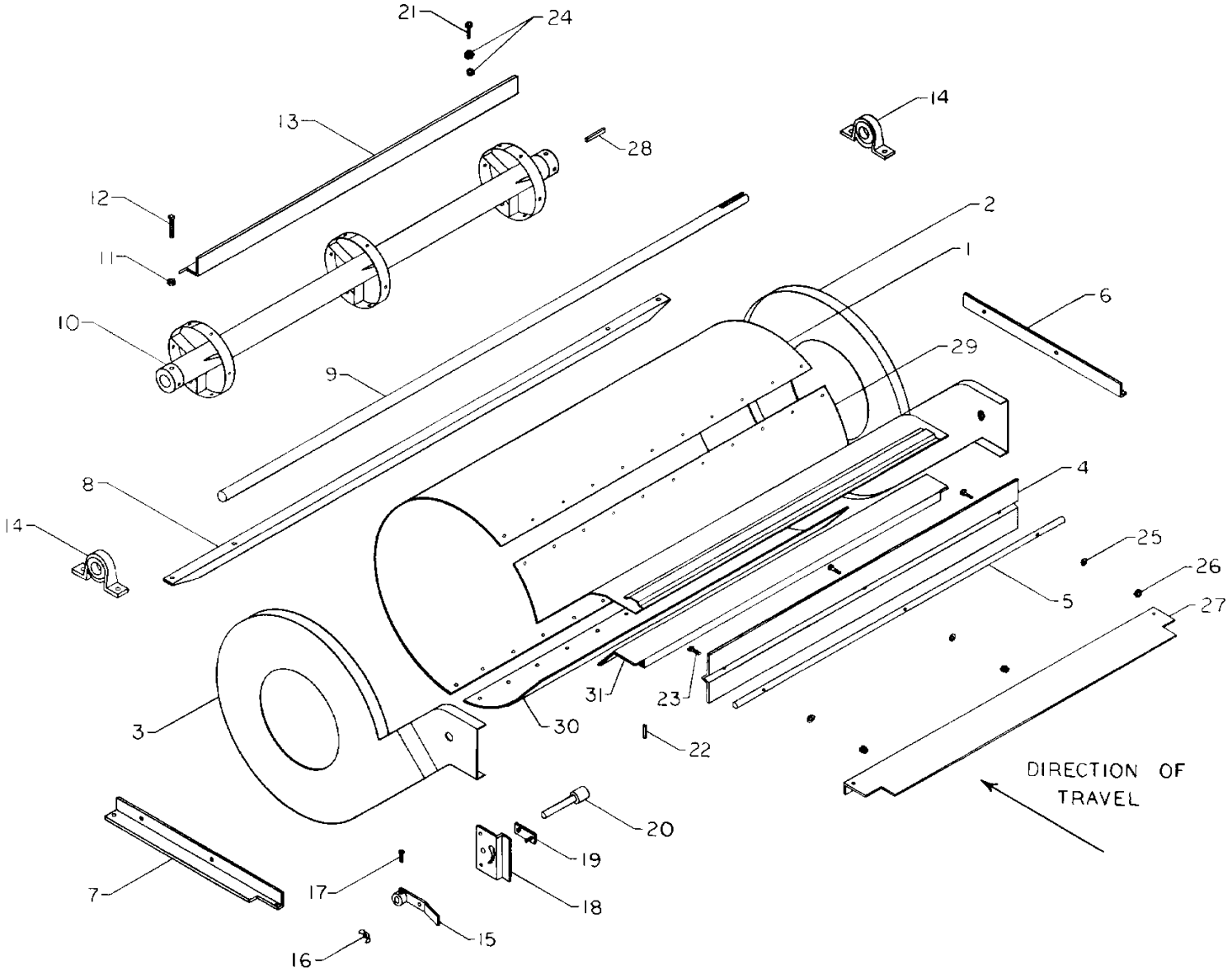
21
24
13
28
14
12
2
11
1
6
10
29
9
4
8
14
25
26
5
27
31
23
3
30
22
DIRECTION OF TRAVEL
20
19
7
17
18
15
16

9. CLEANING FAN SECTION

NO.	PART NO.	KEYWORD	DESCRIPTION	NO. RQ'D
1	120130	HOUSING	FRONT HALF	1
2	12530	END	RIGHT CLEANING FAN	1
3	12531	END	LEFT CLEANING FAN	1
4	12532	VALVE	ADJUSTABLE	1
5	6086	ROD	VALVE CONTROL	1
6	6087	ANGLE	HOUSING MOUNTING, RIGHT	1
7	6088	ANGLE	HOUSING MOUNTING, LEFT	1
8	6089	ANGLE	HOUSING MOUNTING, TRANSVERSE	1
9	10110	SHAFT	CLEANING FAN	1
10	5363	ROTOR	CLEANING FAN	1
11	G120377	NUT	3/8-16 USS	4
12	G102896	SETSCREW	3/8-16 X 1 SQUARE HEAD	4
13	120120	BLADE	CLEANING FAN	6
14	3001	BEARING	1-3/16" PILLOW BLOCK	2
--	3096	INSERT	1-3/16 REPLACEMENT BEARING	A/R
--	3005	COLLAR	1-3/16 ECCENTRIC LOCKING	A/R
15	6111	HANDLE	AIR VALVE ADJUSTING	1
16	G126177	NUT	1/4-20 WING	1
17	G102872	SETSCREW	1/4-20 X 3/4 SQUARE HEAD	1
18	12029	PLATE	BUTTERFLY ADJUSTING	1
19	6112	LOCK	AIR VALVE ADJUSTING HANDLE	1
20	6092	CONNECTOR	AIR VLAVE CONTROL	1
21	G180079	SCREW	5/16-18 X 1 CAP	18
22	2099	PIN	3/16 X 1 EXPANSION	1
23	G180022	SCREW	1/4-20 X 1 USS CAP	3
24	G120376	NUT	5/16-18 USS	36
25	G120380	LOCKWASHER	1/4	3
26	G120375	NUT	1/4-20 USS	3
27	12898	PLATE	CENTER SECTION HOUSING	OPT
28	1063	KEYSTOCK	1/4 X 1-1/2	1
29	120128	HOUSING	TOP REAR SECTION	1
30	120294	PLATE	BOTTOM REAR HOUSING SECTION	1
31	120295	PLATE	BOTTOM REAR HOUSING SECTION EXTENSION	1

See pages 30-33 for sheaves and belts.

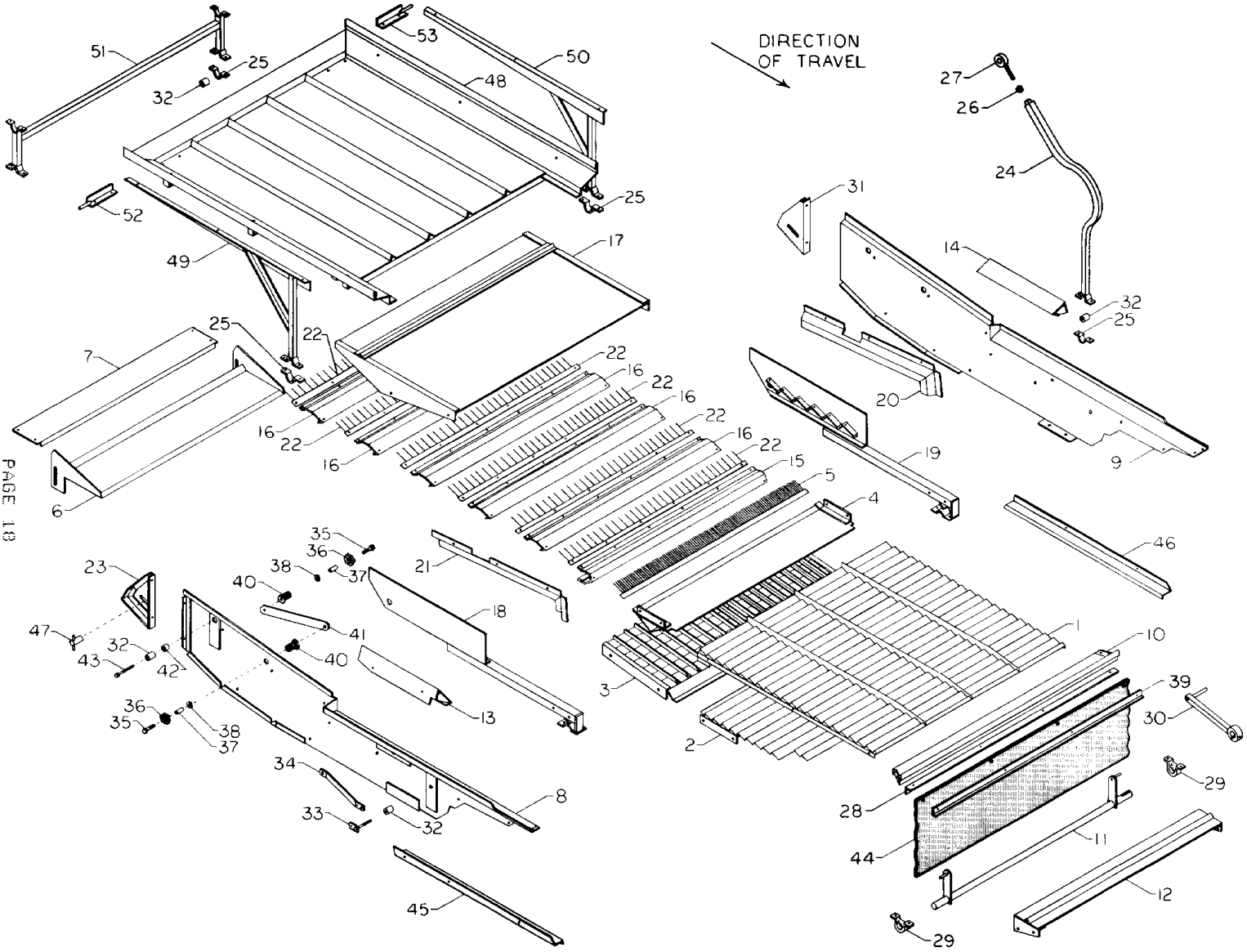
DIRECTION OF TRAVEL
51
25
32
53
50
48
52
49
25
17
7
25
22
16
22
16
22
16
22
16
22
16
22
6
15
5
4
19
20
14
31
27
26
24
32
25
9
46
35
36
37
38
40
21
18
23
47
32
43
42
41
40
13
1
10
3
39
30
36
35
38
37
2
29
34
33
32
8
28
44
11
12
45
29

10. CLEANING SHOE SECTION

NO.	PART NO.	KEYWORD	DESCRIPTION	NO. REQ'D
1	12612	SCREEN	UNCLEANED PEANUT RECEIVING PLATE	1
2	12613	SCREEN	LOWER AIR CHANNEL PLATE	1
3	12614	SCREEN	FINAL CLEANING	1
4	12548	BOARD	FINGER STRIP ASSEMBLY	1
5	12852	FINGER	SCREENING ASSEMBLY NO. 12 X 42-3/4	1
6	12844	BOARD	ADJUSTING SECTION TAIL	1
7	12845	PLATE	TAIL BOARD BOTTOM SECTION	1
8	12520	SIDE	CLEANING TRAY, RIGHT	1
9	12521	SIDE	CLEANING TRAY, LEFT	1
10	12522	SIDE	CLEANING TRAY, FRONT	1
11	10107	SHAFT	VIBRATING SCREEN DRIVE	1
12	12855	PLATE	CLEANING AIR DIRECTING	1
13	12863	GUARD	TRASH, FIXED, RIGHT	1
14	12864	GUARD	TRASH, FIXED, LEFT	1
15	12846	PLATE	AIR DIRECTION CONTROL, FRONT	1
16	12847	PLATE	AIR LIFT CONTROL	5
17	12862	SHIELD	CLEANING AIR INTERFERENCE	1
18	12850	FRAME	VIBRATING SCREEN, RIGHT	1
19	12851	FRAME	VIBRATING SCREEN, LEFT	1
20	12842	GUARD	TRASH VIBRATING SCREEN, LEFT	1
21	12843	GUARD	TRASH VIBRATING SCREEN, RIGHT	1
22	120583	FINGER	SCREENING ASSEMBLY	6
23	12853	FRAME	SIDE TAILBOARD, RIGHT	1
24	6668	PITMAN	VIBRATING SCREEN, DRIVE	1
25	6666	CLAMP	RUBBER BUSHING RETAINING, 1-3/4 WIDE ...	5
26	6121358	NUT	5/8-18 SAE	1
27	3017	BEARING	5/8 ROD END	1
28	6433	ANGLE	CURTAIN MOUNTING	1
29	3101	BEARING	1" PILLOW BLOCK	2
--	3095	INSERT	1" REPLACEMENT BEARING	A/R
--	3030	COLLAR	1" ECCENTRIC LOCKING	A/R
30	6069	ARM	PITMAN VIBRATING SCREEN, DRIVE	1
31	12854	FRAME	SIDE, TAIL BOARD, LEFT	1
32	4044	GROMMET	RUBBER	11
33	6173	TIGHTENER	HANGER BOLT	2
34	6174	BRACE	HANGER BOLT ASSEMBLY, ARM	2
35	6180034	SCREW	1/4-20 X 1-1/2 USS CAP	4
36	6124944	NUT	5/8-18 SAE JAM	4
37	4078	BUSHING	NYLON	4
38	6121574	LOCKWASHER	5/8	4
39	6195	STRIP	CURTAIN RETAINING	1
40	3061	BEARING	5/8 SAE	4
41	6114	ARM	VIBRATING TRAY	2
42	1030	SPACER	1/2 BORE X 1/2 LONG	2
43	6181713	SCREW	1/2-20 X 3-1/2 SAE CAP	2
44	4189	CURTAIN	.....	1
45	120302	PLATE	MATERIAL GUIDE, RIGHT	1
46	120303	PLATE	MATERIAL GUIDE, LEFT	1
47	2083	LOCK	TAIL BOARD ADJUSTMENT	2
48	12504	TRAY	MATERIAL CONVEYING, REAR	1
49	6049	FRAME	TRAY SUPPORT, RIGHT	1
50	6050	FRAME	TRAY SUPPORT, LEFT	1
51	6304	HANGER	MATERIAL CONVEYING TRAY, REAR	1
52	6051	HANGER	MATERIAL CONVEYING TRAY, RIGHT	1
53	6053	HANGER	MATERIAL CONVEYING TRAY, LEFT	1

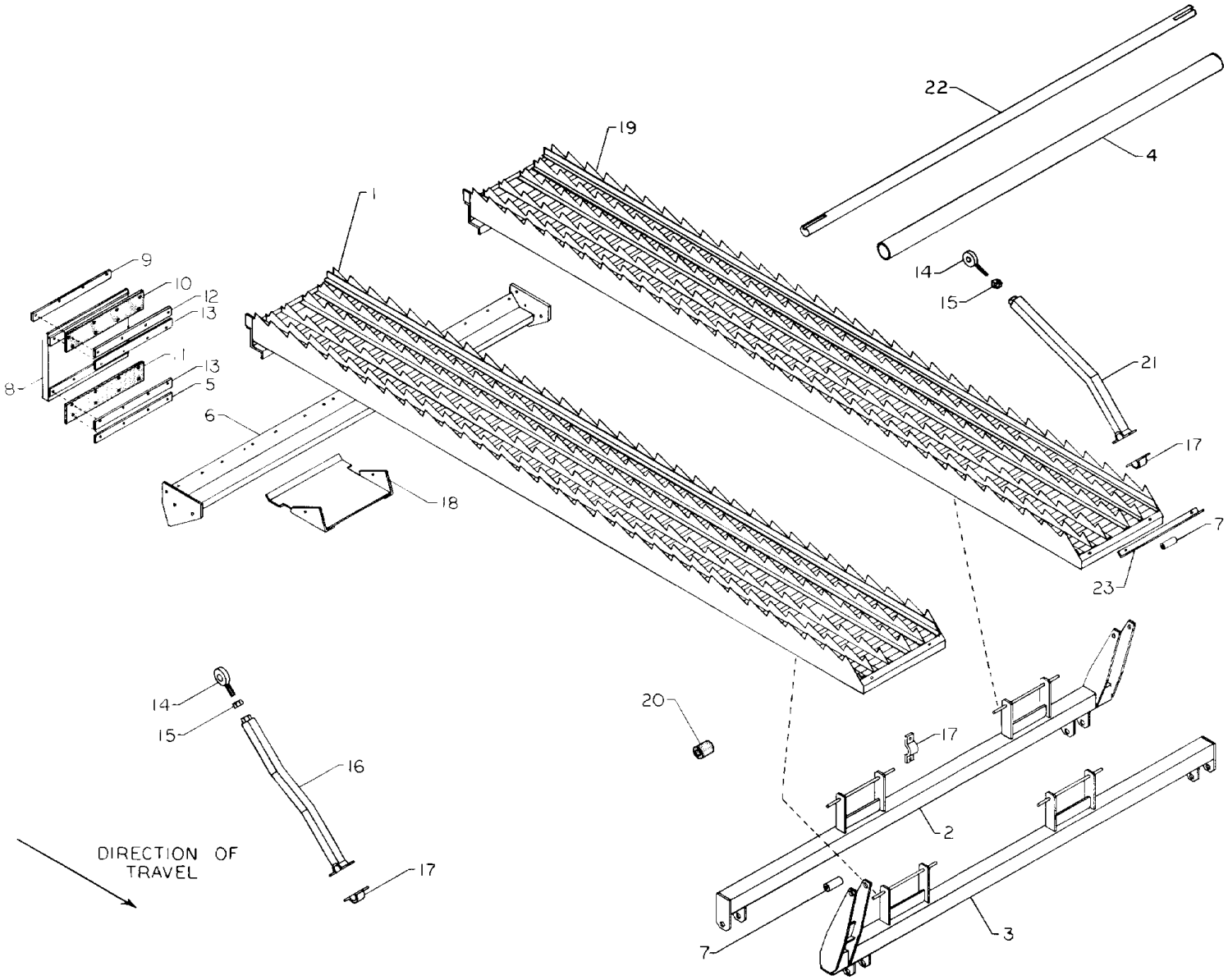
22
4
19
1
9
10
12
13
1
13
5
8
6
18
14
15
21
17
7
23
14
15
16
20
17
2
DIRECTION OF
TRAVEL
17
7
3

11. STRAW RACK SECTION

NO.	PART NO.	KEYWORD	DESCRIPTION	NO. REQ'D
1	120306	RACK	STRAW ASS'Y., #2 & #4	2
2	6662	SHAFT	STRAW RACK ROCK, REAR	1
3	6663	SHAFT	STRAW RACK ROCK, FRONT	1
4	2082	SLEEVE	STRAW RACK PITMAN DRIVE	1
5	6594	FLAT	BOTTOM INSIDE MT'G.	4
6	9669	FRAME	STRAW RACK HANGER	1
7	2154	SLEEVE	RUBBER BUSHING INSERT, 2" LONG	2
8	120127	PLATE	STRAW RACK HANGER	4
9	6595	TIGHTENER	TOP REAR	4
10	4265	FLAP	TOP HINGE	4
11	4266	FLAP	LOWER HINGE	4
12	6592	TIGHTENER	TOP INSIDE	4
13	6593	TIGHTENER	UPPER & LOWER INSIDE	8
14	3017	BEARING	5/8" ROD END	2
15	G121358	NUT	5/8-18 SAE	2
16	6659	PITMAN	STRAW RACK DRIVE, RIGHT	1
17	6666	CLAMP	RUBBER BUSHING RETAINING, 1-3/4" WIDE	10
18	12841	ATTACHMENT	REAR STRAW RACK, PAN	4
19	120307	RACK	STRAW ASS'Y., #1 & #3	2
20	4044	BUSHING	RUBBER	12
21	6726	PITMAN	STRAW RACK DRIVE, LEFT	1
22	10104	SHAFT	STRAW RACK PITMAN DRIVE	1
23	6171	ANGLE	STRAW RACK ATTACHMENT FRONT	4

See pages 30-33 for sheaves, keys, bearings, flangettes, collars, and belts.

NOTE: To distinguish the difference in where the straw racks are to be located, stand behind machine and count from left to right, this will give the correct positioning of the racks.

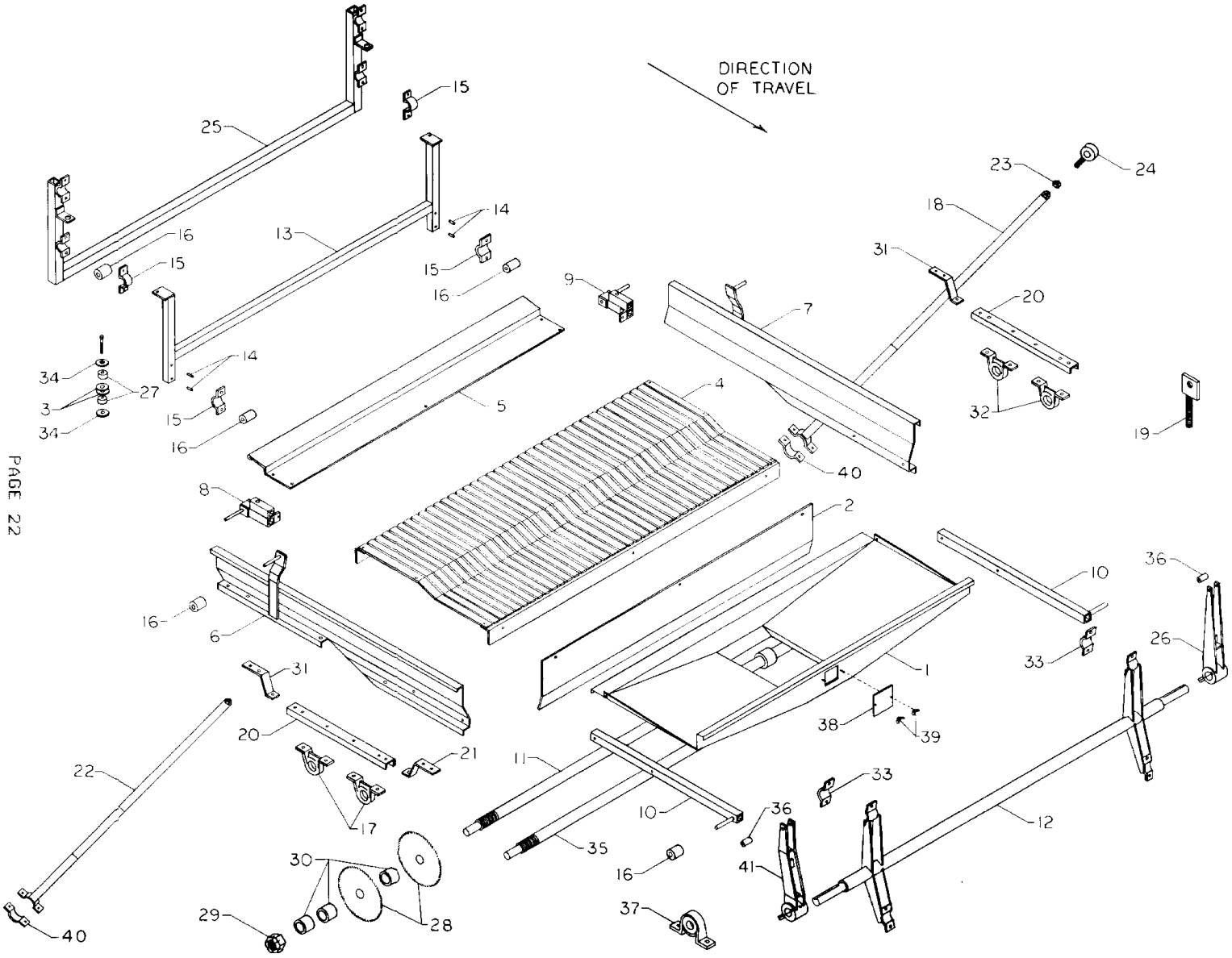
DIRECTION
OF TRAVEL
25
15
16
13
14
15
16
9
7
23
24
18
31
20
34
27
3
34
14
15
16
5
4
32
19
40
8
2
10
36
16
6
26
33
31
1
38
39
20
21
22
11
33
17
10
36
12
35
30
16
41
29
28
37
40

12. STEMMER SECTION

NO.	PART NO.	KEYWORD	DESCRIPTION	NO. REQ'D
1	12861	HOPPER	STEMMER DISCHARGE	1
2	12860	DEFLECTOR		1
3	2052	LOCATOR	RUBBER BUSHING	4
4	120213	BOTTOM	STEMMER (VIRGINIA PEANUTS)	1
---	120142	BOTTOM	STEMMER (SPANISH PEANUTS)	OPT
---	12856	BOTTOM	STEMMER (FOR U.S.A.)	OPT
5	12857	PLATE	STEMMER ATTACHING	1
6	12858	FRAME	SIDE, STEMMER, RIGHT	1
7	12859	SIDE	SIDE, STEMMER, LEFT	1
8	6176	BRACKET	STEMMER HANGER MOUNTING, RIGHT	1
9	6177	BRACKET	STEMMER HANGER MOUNTING, LEFT	1
10	6175	ARM	STEMMER HANGER MOUNTING	2
11	10108	SHAFT	STEMMER SAW, TURNS TOWARD REAR	1
12	10044	SHAFT	& HANGER ASS'Y.	1
13	6071	PIVOT	HANGER ASS'Y.,STEMMER BOX, REAR	1
14	6072	SPACER		4
15	9418C	CLAMP	RUBBER BUSHING RETAINING	8
16	4044	GROMMET	RUBBER	16
17	3103	BEARING	7/8" PILLOW BLOCK	2
---	3102	INSERT	7/8" REPLACEMENT BEARING	A/R
---	3074	COLLAR	7/8" ECCENTRIC LOCKING	A/R
18	6661	PITMAN	CLEANING SHOE DRIVE, LEFT	1
19	6196	ADJUSTER	STEMMER SAW	1
20	9502	GUIDE	STEMMER SAW	2
21	6179	BRACKET	STEMMER SAW MOUNTING, FRONT	1
22	6665	PITMAN	CLEANING SHOE DRIVE, RIGHT	1
23	6121358	NUT	5/8" SAE	2
24	3017	BEARING	5/8" ROD END	2
25	6316	HANGER	ASS'Y., CLEANING SHOE, REAR	1
26	6658	ARM	PITMAN, CLEANING SHOE DRIVE, LEFT	1
27	4076	BUSHING	STEMMER HANGER SUPPORT	4
28	5150	SAW	72 TOOTH STEMMER (FOR VIRGINIA PEANUTS)	66
---	5150	SAW	72 TOOTH STEMMER (FOR SPANISH PEANUTS)	70
---	5150	SAW	72 TOOTH STEMMER (FOR U.S.A.,OPTIONAL)	74
29	6272324	NUT	1" SAE CASTLE	2
30	2148	SPACER	STEMMER SAW (VIRGINIA PEANUTS)	70
---	2141	SPACER	STEMMER SAW (SPANISH PEANUTS)	74
---	2076	SPACER	STEMMER SAW (FOR U.S.A.,OPTIONAL)	70
31	6178	FLAT	STEMMER SAW MOUNTING, REAR	2
32	3101	BEARING	1" PILLOW BLOCK	2
---	3095	INSERT	1" REPLACEMENT BEARING	A/R
---	3030	COLLAR	1" ECCENTRIC LOCKING	A/R
33	6247	CLAMP	RUBBER BUSHING RETAINING, WITH 5/16 HOLE	4
34	2053	RETAINER	RUBBER BUSHING	4
35	10108	SHAFT	STEMMER SAW, TURNS TOWARD FRONT	1
36	2154	SLEEVE	RUBBER BUSHING INSERT, 2" LONG	2
37	3001	BEARING	1-3/16" PILLOW BLOCK	2
---	3096	INSERT	1-3/16" REPLACEMENT BEARING	A/R
---	3005	COLLAR	1-3/16" ECCENTRIC LOCKING	A/R
38	12942	COVER	INSPECTION	1
39	6126177	NUT	1/4-20 X 3/4" LONG WING	2
40	6666	CLAMP	RUBBER BUSHING RETAINER, 1-3/4" WIDE	2
41	6662	ARM	CLEANING SHOE DRIVE PITMAN, RIGHT	1

See pages 30-33 for sheaves, keys, and belts.

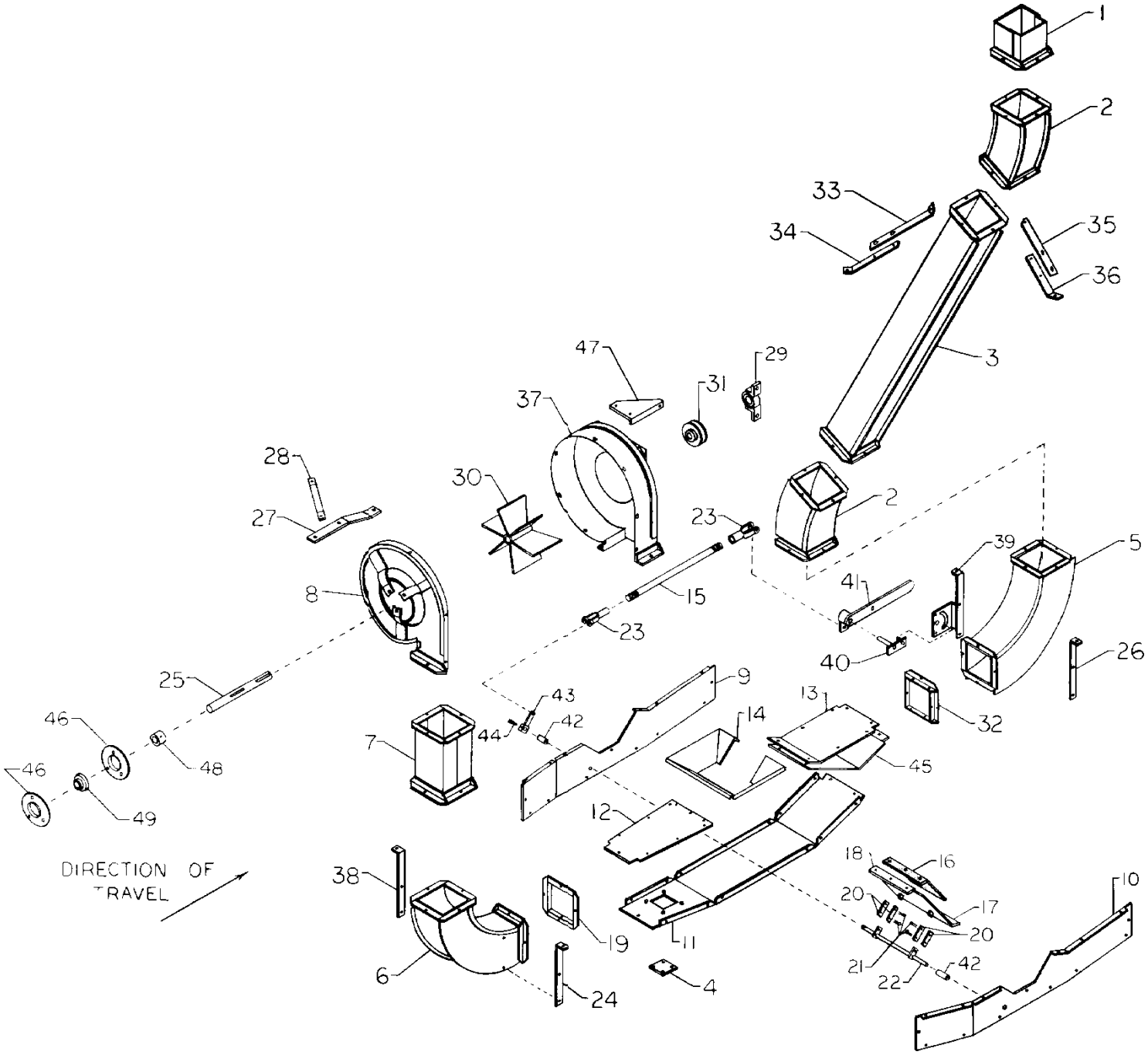
1
2
33
34
35
36
3
47
29
31
37
28
30
27
2
23
39
5
8
15
41
23
40
26
25
9
43
13
32
46
42
14
44
7
45
48
46
12
49
DIRECTION OF TRAVEL
18
16
38
20
17
10
20
19
11
21
42
6
22
24
4

13. PNEUMATIC CONVEYOR SECTION

NO.	PART NO.	KEYWORD	DESCRIPTION	NO. REQ'D
1	12819	DUCT	NOZZLE, CONVEYOR	1
2	12817	PIPE	CONVEYOR, CURVED SECTION	2
3	12818	PIPE	CONVEYOR, STRAIGHT SECTION	1
4	12816	PLATE	INSPECTION	1
5	12806	PIPE	CONVEYOR WITH CLEANOUT DOOR	1
---	4294-4	CHAIN	4 LINKS, PROOF COIL	2
---	2199	PIN	COTTER, 3/16 X 2	4
6	12805	PIPE	HIGH PRESSURE CURVED SECTION	1
7	12804	PIPE	HIGH PRESSURE BLOWER CONNECTING	1
8	120775	HOUSING	BEARING MOUNTING SIDE	1
9	120123	SIDE	JET TUNNEL, LEFT	1
10	120124	SIDE	JET TUNNEL, RIGHT	1
11	12815	BOTTOM	PANEL, JET TUNNEL	1
12	120126	PLATE	COVER, JET TUNNEL, HIGH PRESSURE END	1
13	12810	PLATE	COVER, JET TUNNEL, LOW PRESSURE END	1
14	120125	HOPPER	PNUEMATIC CONVEYOR	1
15	6162	ADJUSTER	AIR VOLUME CONTROL	1
16	4263	FLAP	HINGE	1
17	120121	VALVE	CHECK AND VENTURI CONTROL	1
18	6591	TIGHTENER	FLAP	2
19	12570	BRACKET	HIGH PRESSURE PIPE CONNECTING	1
20	6590	EXTENSION	ADJUSTING ROD	4
21	2195	PIN	3/16 X 1 COTTER	4
22	6589	ROD	ADJUSTMENT	1
23	2003	CLEVIS	1/4 SAE	2
---	2009	PIN	1/4 X 3/4 CLEVIS	2
---	2306	PIN	3/32 X 1-1/2 COTTER	2
24	6158	BRACE	PNEUMATIC CONVEYOR SUPPORT, FRONT RIGHT	1
25	10151	SHAFT	BLOWER ROTOR	1
26	6747	BRACE	PNUEMATIC CONVEYOR SUPPORT, FRONT LEFT	1
27	6156	BRACE	BLOWER MOUNTING, PRIMARY	1
28	6155	BRACE	BLOWER MOUNTING, SECONDARY	1
29	3101	BEARING	1" PILLOW BLOCK	1
---	3095	INSERT	1" REPLACEMENT BEARING	A/R
---	3030	COLLAR	1" ECCENTRIC LOCKING	A/R
30	12803	ROTOR	FAN	1
31	5090	SHEAVE	1B5.0 WITH 1" BORE	1
32	6161	BRACKET	JET TUNNEL OUTLET	1
33	12579	BRACE	DUCT, REARWARD, UPPER SECTION	1
34	12578	BRACE	DUCT, REARWARD, LOWER SECTION	1
35	12577	BRACE	DUCT, FORWARD, UPPER SECTION	1
36	12576	BRACE	DUCT, FORWARD, LOWER SECTION	1
37	120774	HOUSING	FAN	1
38	6157	BRACKET	HIGH PRESSURE PIPE MOUNTING, REAR	1
39	6159	BRACKET	QUADRANT ASS'Y.	1
40	6181	TIGHTENER	HINGE PIN & CONTROL HANDLE	1
41	6587	HANDLE	JET AIR VOLUME CONTROL	1
---	2188	PIN	3/16 X 1-1/2 COTTER	1
42	2134	SPACER	ADJUSTMENT ROD	2
43	6588	ARM	CRANK, ADJUSTMENT ROD	1
44	6102870	SETSCREW	1/4-20 X 1/2 SQUARE HEAD	1
45	120122	PLATE	PRIMARY JET SECTION	1
46	3094	FLANGETTE	52MS FOR 1" BEARING	2
47	120298	MOUNT	HOUSING	1
48	3030	COLLAR	1" ECCENTRIC LOCKING	1
49	3095	INSERT	1" REPLACEMENT BEARING	1

See pages 32-33 for belt.

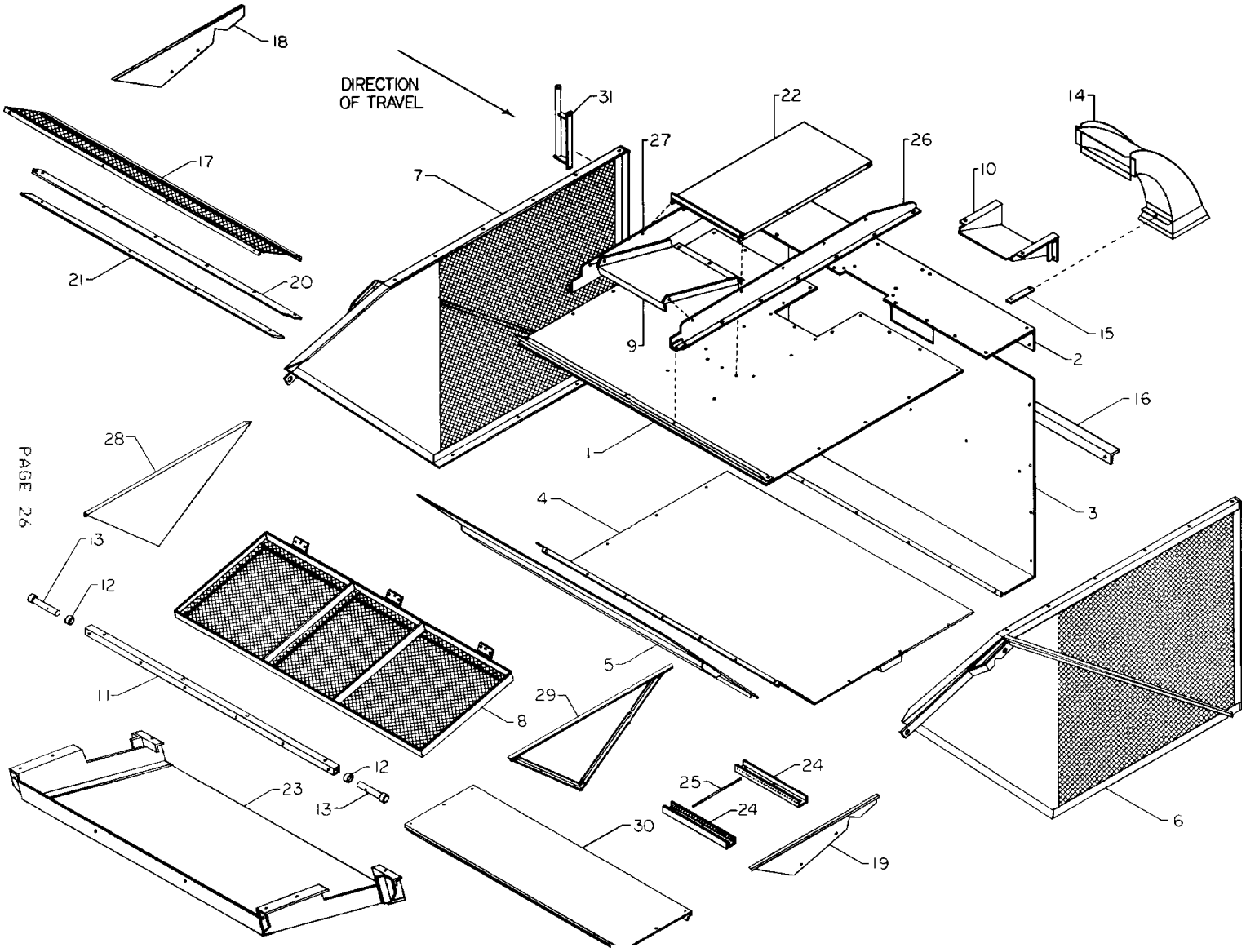
DIRECTION
OF TRAVEL
18
31
22
14
17
27
26
7
10
21
20
15
9
2
16
28
1
3
4
13
12
5
11
29
8
12
24
25
23
13
24
30
6
19

14. BASKET SECTION

NO.	PART NO.	KEYWORD	DESCRIPTION	NO. REQ'D
1	120426	TOP	LID ATTACHING SECTION	1
2	120430	TOP	DUCT INLET SECTION	1
3	120439	PLATE	DUCT INLET SIDE	1
4	120438	PLATE	BOTTOM HOUSING SECTION	1
5	120434	PLATE	BOTTOM HOUSING DISCHARGE	1
6	120436	SIDE	ASSEMBLY, FRONT	1
7	120435	SIDE	ASSEMBLY, REAR	1
8	120425	LID	BASKET DUMPING	1
9	120432	PLATE	AIR DEFLECTOR	1
10	120433	DEFLECTOR	INTERIOR AIR	1
11	9746	BAR	BIN HINGE	1
12	9508B	TUBING	BIN HINGE	2
13	9508	SHAFT	BIN HINGE	2
14	12820	PIPE	BIN INLET	1
15	6182	BRACE	PIPE	1
16	120442	STIFFENER	BIN HOUSING	1
17	120443	SCREEN	ASSEMBLY, DIRT REMOVAL	1
18	12551	END	BIN LIP, RIGHT	1
19	12552	END	BIN LIP, LEFT	1
20	120440	PLATE	BOTTOM, BIN LIP	1
21	120441	STIFFENER	BASKET SPOUT	1
22	120427	COVER	DUCT TOP	1
23	120444	ATTACHMENT	SANDTRAP ASSEMBLY	1
24	120431	PLATE	FINGER, MOUNTING	2
--	120119	PLATE	FINGER, MOUNTING, (SPANISH PEANUTS)	2
25	2133	FINGER	SCREENING	34
--	2133	FINGER	SCREENING, (SPANISH PEANUTS)	38
26	120428	SIDE	AIR DUCT, LEFT	1
27	120429	SIDE	AIR DUCT, RIGHT	1
28	120776	EXTENSION	BIN LIP, RIGHT	OPT
29	120777	EXTENSION	BIN LIP, LEFT	OPT
30	120778	EXTENSION	BIN LIP, BOTTOM	OPT
31	9849	HANDLE	BASKET GRAB	1

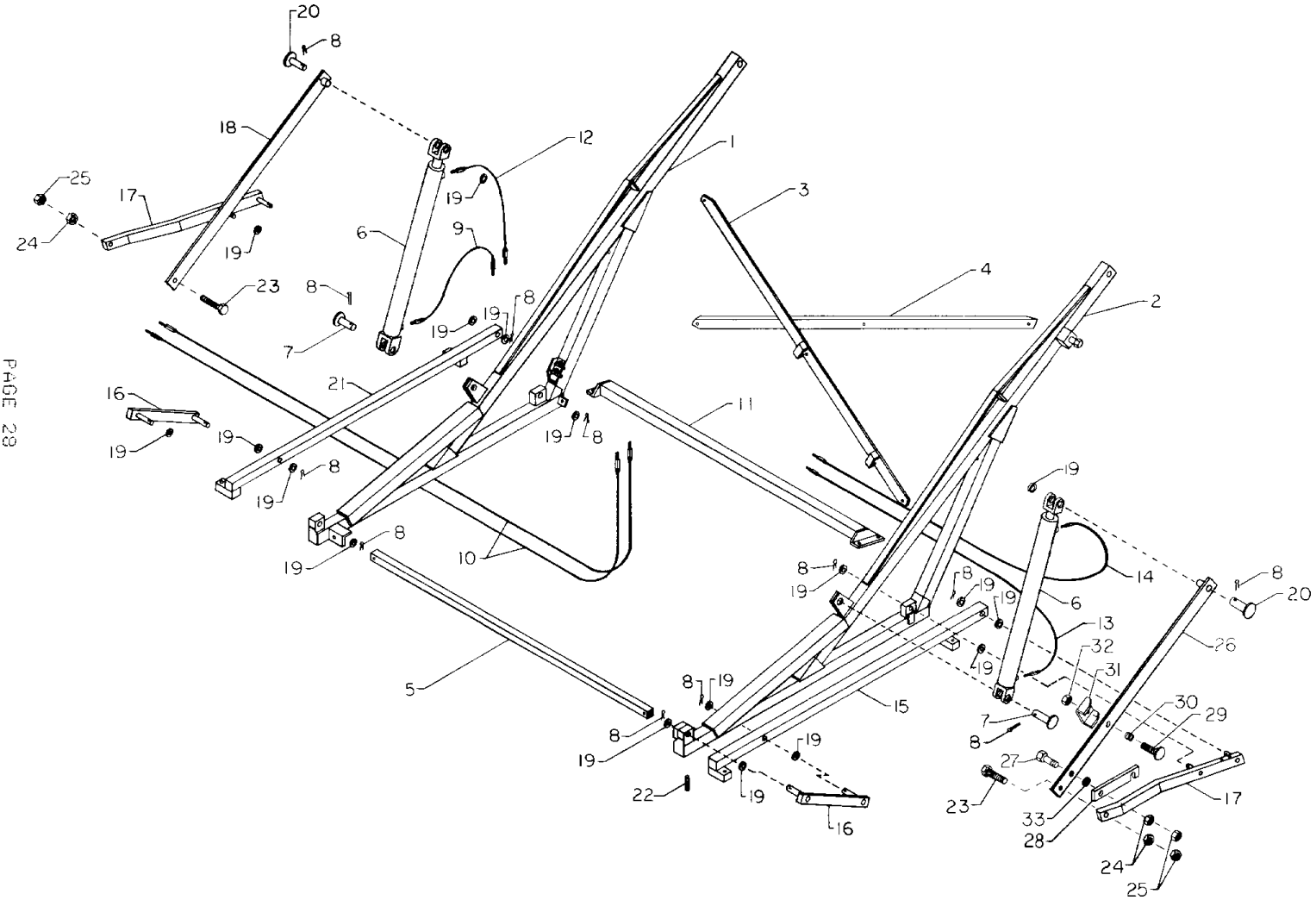
20
8
18
12
1
25
17
19
3
24
6
9
19
4
23
8
19
8
2
7
19
21
16
11
19
19
8
19
8
19
10
19
14
8
8
19
19
20
6
13
26
32
31
19
5
8
19
15
30
29
7
8
19
27
22
19
23
17
16
33
28
24
25

15. BASKET FRAME SECTION

NO.	PART NO.	KEYWORD	DESCRIPTION	NO. REQ'D
1	9736	FRAME	SIDE ASSEMBLY, LEFT	1
2	9744	FRAME	SIDE ASSEMBLY, RIGHT	1
3	9742	BRACE	FLAT SECTION	1
4	9741	BRACE	ANGLE SECTION	1
5	9739	BAR	BIN FRAME CONNECTOR	1
6	14000	CYLINDER	HYDRAULIC	2
---	14007	KIT	2 X 30 CYLINDER REPAIR	A/R
7	2211	PIN	CYLINDER ATTACHING	2
8	2193	PIN	3/16 X 1-3/4 COTTER	12
9	14002	HOSE	HYDRAULIC, 1/4" X 24" LONG	1
10	14001	HOSE	HYDRAULIC, 3/8" X 142" LONG	2
11	9740	BRACE	FRONT	1
12	14003	HOSE	HYDRAULIC, 1/4" X 30" LONG	1
13	14023	HOSE	HYDRAULIC, 1/4" X 101" LONG	1
14	14024	HOSE	HYDRAULIC, 1/4" X 108" LONG	1
---	2046	COUPLING	1/4" SWIVEL	2
---	2047	COUPLING	1/4", 45 DEGREE SWIVEL	2
---	2048	REDUCER	3/8" - 1/4"	4
---	2173	COUPLING	3/8" SWIVEL X 45 DEGREE	2
15	9743	MOUNT	BASKET LOWER, RIGHT	1
16	9735	MOUNT	FRAME	2
17	9737	ARM	LIFT	2
18	9738	BRACE	LIFT, LEFT	1
19	2176	WASHER	BASKET	10
20	2174	PIN	BASKET LIFT	2
21	9734	MOUNT	BASKET LOWER, LEFT	1
22	1406	ROD	1/2-13 X 2-3/4 THREADED	4
23	6271776	SCREW	3/4-10 X 3-1/4 USS CAP	2
24	6220086	NUT	3/4-10 USS	3
25	6426897	NUT	3/4 USS JAM	3
26	9850	BRACE	LIFT, RIGHT	1
27	6271773	SCREW	3/4-10 X 2-1/2 USS CAP	1
28	6925	ARM	LIFT SAFETY	1
29	6126373	BOLT	5/16-18 X 1-1/2 CARRIAGE	1
30	7039	SPRING	NO. 131	1
31	6924	RETAINING	ARM	1
32	6120376	NUT	5/16-18 USS	1
33	6131017	WASHER	3/4 SAE FLAT	1

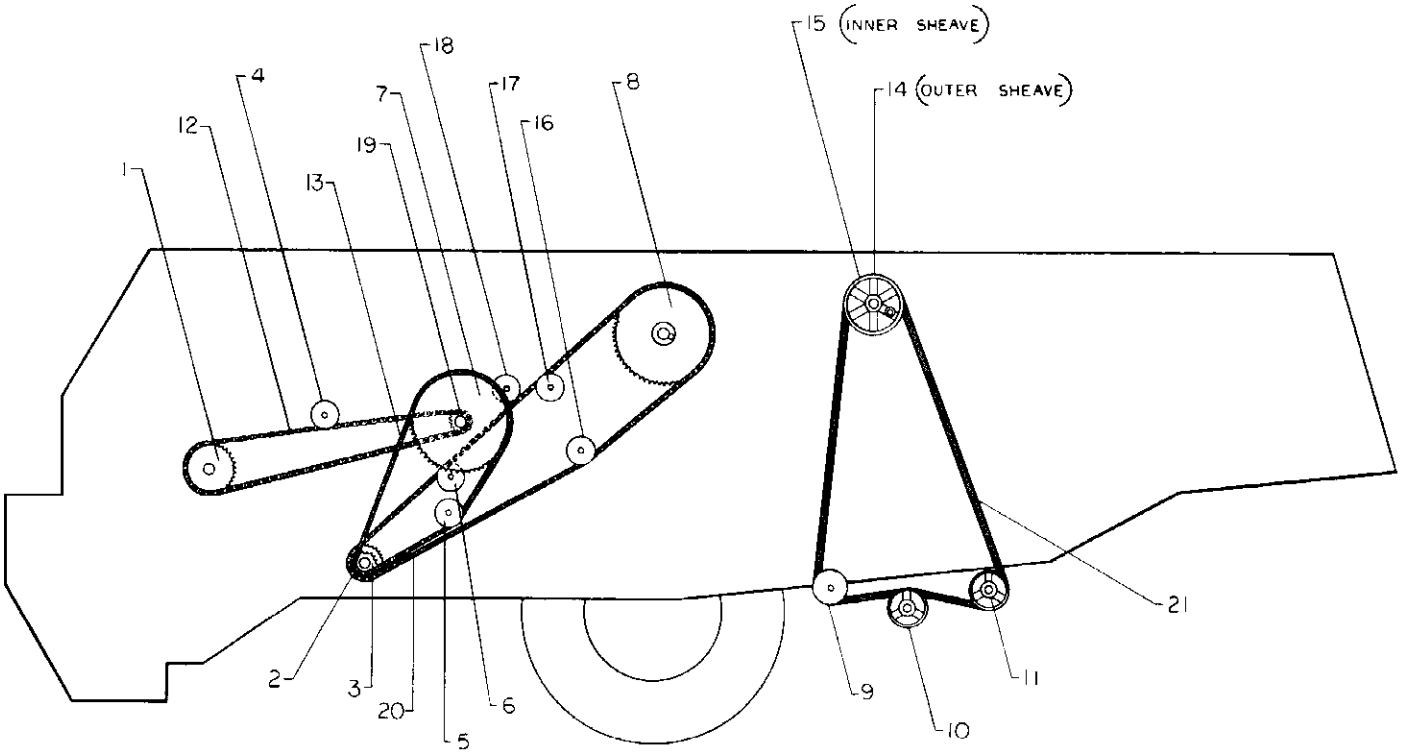

16. DRIVE SECTION, LEFT SIDE

NO.	PART NO.	KEYWORD	DESCRIPTION	NO. REQ'D
1	51021	SPROCKET	60B40 WITH 1-11/16" BORE	1
---	3105	FLANGETTE	SPECIAL B5MS FOR 1-11/16" BEARING	2
---	3099	INSERT	1-11/16" REPLACEMENT BEARING	1
---	3029	COLLAR	1-11/16" ECCENTRIC LOCKING	1
---	1203	KEYSTOCK	3/8 X 1-3/4	1
2	5114	SPROCKET	60B26 WITH 1-11/16" BORE	1
---	3092	FLANGETTE	85MS FOR 1-11/16" BEARING	2
---	3099	INSERT	1-11/16" REPLACEMENT BEARING	1
---	3029	COLLAR	1-11/16" ECCENTRIC LOCKING	1
3	5152	SPROCKET	60B19 WITH 1-11/16" BORE	1
---	1231	KEYSTOCK	3/8 X 3-1/2	1
4	5209	IDLER	4" CHAIN, WITH TIRE	1
---	2036	SPACER	7/8" IDLER	1
5	5209	IDLER	4" CHAIN, WITH TIRE	1
---	2035	SPACER	21/32 ID X 2-1/4" LONG	1
6	5209	IDLER	4" CHAIN, WITH TIRE	1
---	6131016	WASHER	5/8 SAE FLAT	3
7	5113	SPROCKET	60B60 WITH 1-11/16" BORE	1
8	5180	SPROCKET	60A60 WITH 4" BORE	1
---	5517	HUB	1-11/16" BORE, WITH ECCENTRIC HOLE	1
---	3092	FLANGETTE	85MS FOR 1-11/16" BEARING	2
---	3099	INSERT	1-11/16" REPLACEMENT BEARING	1
---	3029	COLLAR	1-11/16" ECCENTRIC LOCKING	1
---	1219	KEYSTOCK	3/8 X 2-3/4	1
---	6138290	SCREW	1/2-13 X 1 HEX SOCKET CAP	4

16. DRIVE SECTION, LEFT SIDE

NO.	PART NO.	KEYWORD	DESCRIPTION	NO. REQ'D
9	5207	IDLER	4" BELT	1
---	2077	SPACER	21/32 ID X 1/2 LONG	1
10	5055	SHEAVE	1B6.0 F1 PD5.70	1
---	1063	KEYSTOCK	1/4 X 1-1/2	1
11	5055	SHEAVE	1B6.0 F1 PD5.70	1
---	1063	KEYSTOCK	1/4 X 1-1/2	1
12	4043H-127	CHAIN	#60H, 127 PITCHES LONG	1
13	4043-103	CHAIN	#60, 103 PITCHES LONG	1
14	5510	SHEAVE	1B8.75 F1-7/16 WITH ECCENTRIC	1
---	1231	KEYSTOCK	3/8 X 3-1/2	1
15	5507	SHEAVE	1B7.8 F1-7/16 PD7.4	1
---	3091	FLANGETTE	72MS FOR 1-7/16 BEARING	2
---	3098	INSERT	1-7/16 REPLACEMENT BEARING	1
---	3080	COLLAR	1-7/16 ECCENTRIC LOCKING	1
16	5209	IDLER	4" CHAIN, WITH 2 TIRES	2
---	2036	SPACER	21/32 ID X 7/8 LONG	1
17	5209	IDLER	4" CHAIN, WITH 2 TIRES	1
---	2031	SPACER	21/32 ID X 3/8 LONG	1
18	5209	IDLER	4" CHAIN, WITH TIRE	1
---	2031	SPACER	21/32 ID X 3/8 LONG	1
19	5133	SPROCKET	60B16 F1-11/16	1
---	3092	FLANGETTE	85MS FOR 1-11/16 BEARING	4
---	3099	INSERT	1-11/16 REPLACEMENT BEARING	2
---	3029	COLLAR	1-11/16 ECCENTRIC LOCKING	2
---	1231	KEYSTOCK	3/8 X 3-1/2	1
20	4043-174	CHAIN	#60, 174 PITCHES LONG	1
21	BB128	BELT	(STEMMER SAW DRIVE)	1

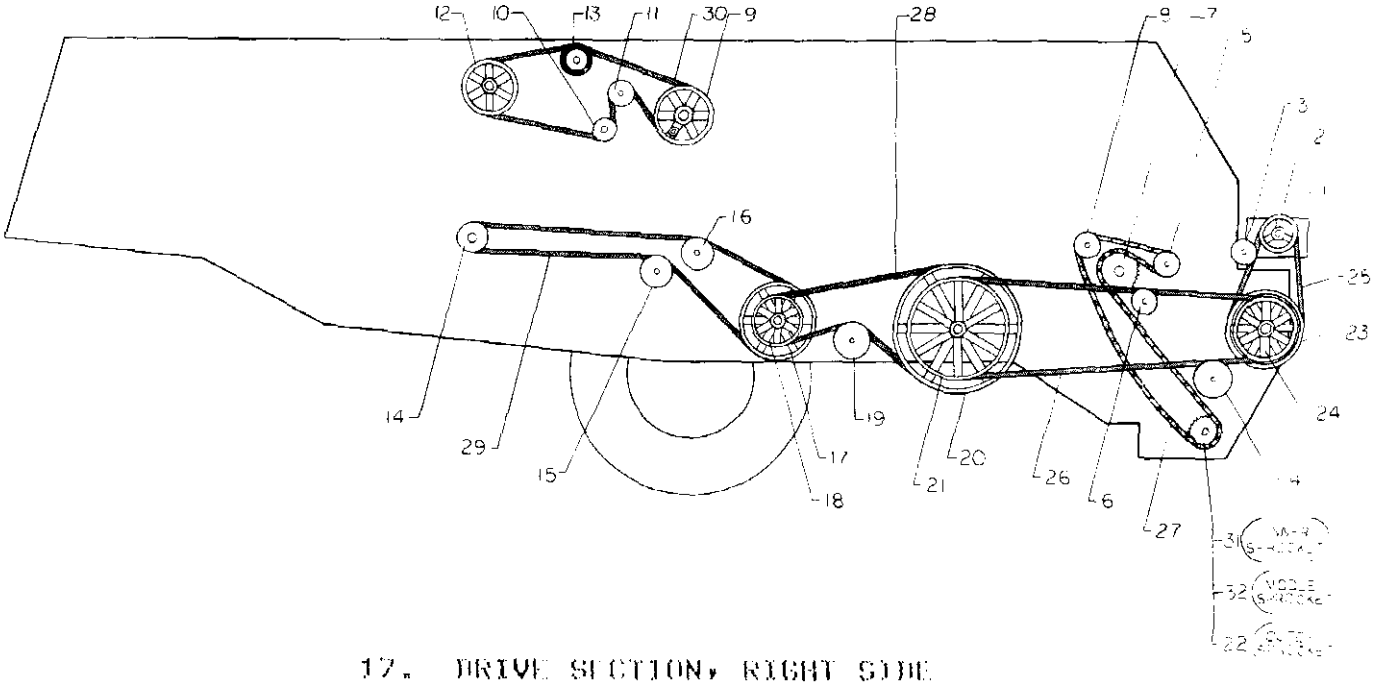

17. DRIVE SECTION, RIGHT SIDE

NO.	PART NO.	KEYWORD	DESCRIPTION	NO. REQ'D
1	14050	PUMP	HYDRAULIC (OPTIONAL)	1
2	5089	SHEAVE	1B6.3, WITH 3/4" BORE	1
3	5205	IDLER	4" SINGLE FLANGE FLAT, BELT	1
4	5210	IDLER	BELT	2
--	2536	SPACER	5/16LGX21/32IDX1-3/16CR	1
5	5209	IDLER	4" CHAIN, WITH TIRE	1
--	2079	SPACER	5/8"	1
6	5218	IDLER	BELT	2
--	2536	SPACER	5/16LGX21/32IDX1-3/16CR	1
--	2078	SPACER	11/32" X 21/32 ID.	1
7	5187	SPROCKET	40B30, WITH 1-11/16" BORE	1
--	3105	FLANGETTE	1-11/16" SPECIAL 85MS F/1-11/16" BEARING	2
--	3099	INSERT	1-11/16" REPLACEMENT BEARING	1
--	3029	COLLAR	1-11/16" ECCENTRIC LOCKING	1
--	1135	KEYSTOCK	5/16 X 1-3/4"	1
8	5209	IDLER	4" CHAIN, WITH TIRE	1
--	2079	SPACER	5/8"	1
9	5516	SHEAVE	2B9.75, WITH 1-11/16" BORE W/ECC.	1
--	3092	FLANGETTE	85MS FOR 1-11/16" BEARING	2
--	3099	INSERT	1-11/16" REPLACEMENT BEARING	1
--	3029	COLLAR	1-11/16" ECCENTRIC LOCKING	1
--	1219	KEYSTOCK	3/8 X 2-3/4	1
10	5515	SHEAVE	2B3.4 P.D., WITH 1-3/16" BORE	1
--	3093	FLANGETTE	62MS FOR 1-3/16" BEARING	4
--	3096	INSERT	1-3/16" REPLACEMENT BEARING	2
--	3005	COLLAR	1-3/16" ECCENTRIC LOCKING	2
--	1075	KEYSTOCK	1/4 X 2-1/4	1
11	5211	IDLER	BELT, 1 OPEN SIDE	1
12	5504	SHEAVE	2B8.75, WITH 1-7/16" BORE, W/ECC.	1
--	3091	FLANGETTE	72MS FOR 1-7/16" BEARING	2
--	3098	INSERT	1-7/16" REPLACEMENT BEARING	1
--	3080	COLLAR	1-7/16" ECCENTRIC LOCKING	1
--	1207	KEYSTOCK	3/8 X 2	1

17. DRIVE SECTION, RIGHT SIDE

NO.	PART NO.	KEYWORD	DESCRIPTION	NO. REQ'D
13	5501	SHEAVE	2B5.1, WITH 1" BORE	1
--	3094	FLANGETTE	52MS FOR 1" BEARING	4
--	3095	INSERT	1" REPLACEMENT BEARING	2
--	3030	COLLAR	1" ECCENTRIC LOCKING	2
--	1075	KEYSTOCK	1/4 X 2-1/4"	1
14	5090	SHEAVE	1B5.0, WITH 1" BORE	1
--	3094	FLANGETTE	52MS FOR 1" BEARING	2
--	3095	INSERT	1" REPLACEMENT BEARING	1
--	3030	COLLAR	1" ECCENTRIC LOCKING	1
--	1055	KEYSTOCK	1/4 X 1	1
15	5208	IDLER	6" FLAT BELT	1
--	2080	SPACER	3/4" X 21/32 ID.	1
16	5207	IDLER	4" BELT	1
--	2080	SPACER	3/4" X 21/32 ID.	1
17	5058	SHEAVE	1B13.8, WITH 1-3/16" BORE	1
18	5508	SHEAVE	1C8.0	1
--	5010	BUSHING	1-3/16" SDS	1
--	1079	KEYSTOCK	1/4 X 2-1/2"	1
19	5208	IDLER	6" FLAT BELT	1
20	5505	SHEAVE	1C20.0 (USE ONLY WITH 545 RPM SETUP)	1
--	5522	SHEAVE	3CQ 20.0 F.D.(E) (USE ONLY WITH 1000RPM)	1
--	5506	BUSHING	1-11/16" QD.(USE ONLY WITH 545 RPM)	1
--	5391	BUSHING	E 1-11/16 QD.(USE ONLY WITH 1000 RPM)	1
--	3092	FLANGETTE	85MS FOR 1-11/16" BEARING	2
--	3099	INSERT	1-11/16" REPLACEMENT BEARING	1
--	3029	COLLAR	1-11/16" ECCENTRIC LOCKING	1
--	1255	KEYSTOCK	3/8 X 5	1
21	5051	SHEAVE	2C16.0 (USE ONLY WITH 545 RPM SETUP)	1
--	5506	BUSHING	1-11/16" QD.(USE ONLY WITH 545 RPM)	1
22	51011	SPROCKET	40A48 WITH 1-3/16 BORE AND MT'G. HOLES	1
--	3093	FLANGETTE	62MS FOR 1-3/16 BEARING	2
--	3096	INSERT	1-3/16 REPLACEMENT BEARING	1
--	3005	COLLAR	1-3/16 ECCENTRIC LOCKING	1
--	1075	KEYSTOCK	1/4 X 2-1/4	1
23	5088	SHEAVE	1B11.0	1
--	5060	BUSHING	1-11/16" SDS	1
--	3092	FLANGETTE	85MS FOR 1-11/16" BEARING	2
--	3099	INSERT	1-11/16" REPLACEMENT BEARING	1
--	3029	COLLAR	1-11/16" ECCENTRIC LOCKING	1
--	1203	KEYSTOCK	3/8 X 1-3/4	1
24	5050	SHEAVE	2C10.0 (USE ONLY WITH 545 RPM SETUP)	1
--	5521	SHEAVE	2CQ 70 PB (SF) (USE ONLY WITH 1000 RPM)	1
--	5506	BUSHING	1-11/16" QD.(USE WITH 545 & 1000 RPM)	1
--	1223	KEYSTOCK	3/8 X 3	1
25	3570	BELT	(PUMP DRIVE)	1
26	C144	BELT	(MAIN DRIVE) (USE ONLY WITH 545 RPM)	2
--	C148	BELT	(MAIN DRIVE) (USE ONLY WITH 1000 RPM)	2
27	4284-123	CHAIN	#40 DOUBLE PITCH 123 LINKS	1
28	C112	BELT	(CLEANING FAN DRIVE)	1
29	B136	BELT	(PNEUMATIC DRIVE, CONVEYOR)	1
30	B136	BELT	(STRAW RACK DRIVE)	2
31	5185	SPROCKET	40A20, WITH 1-3/16 BORE & MT'G. HOLES	1
--	2222	SPACER	SPROCKET	4
--	5518	HUB	SPROCKET, WITH 1-3/16" BORE	1
32	51001	SPROCKET	40A32, WITH 1-3/16" BORE & MT'G. HOLES	1

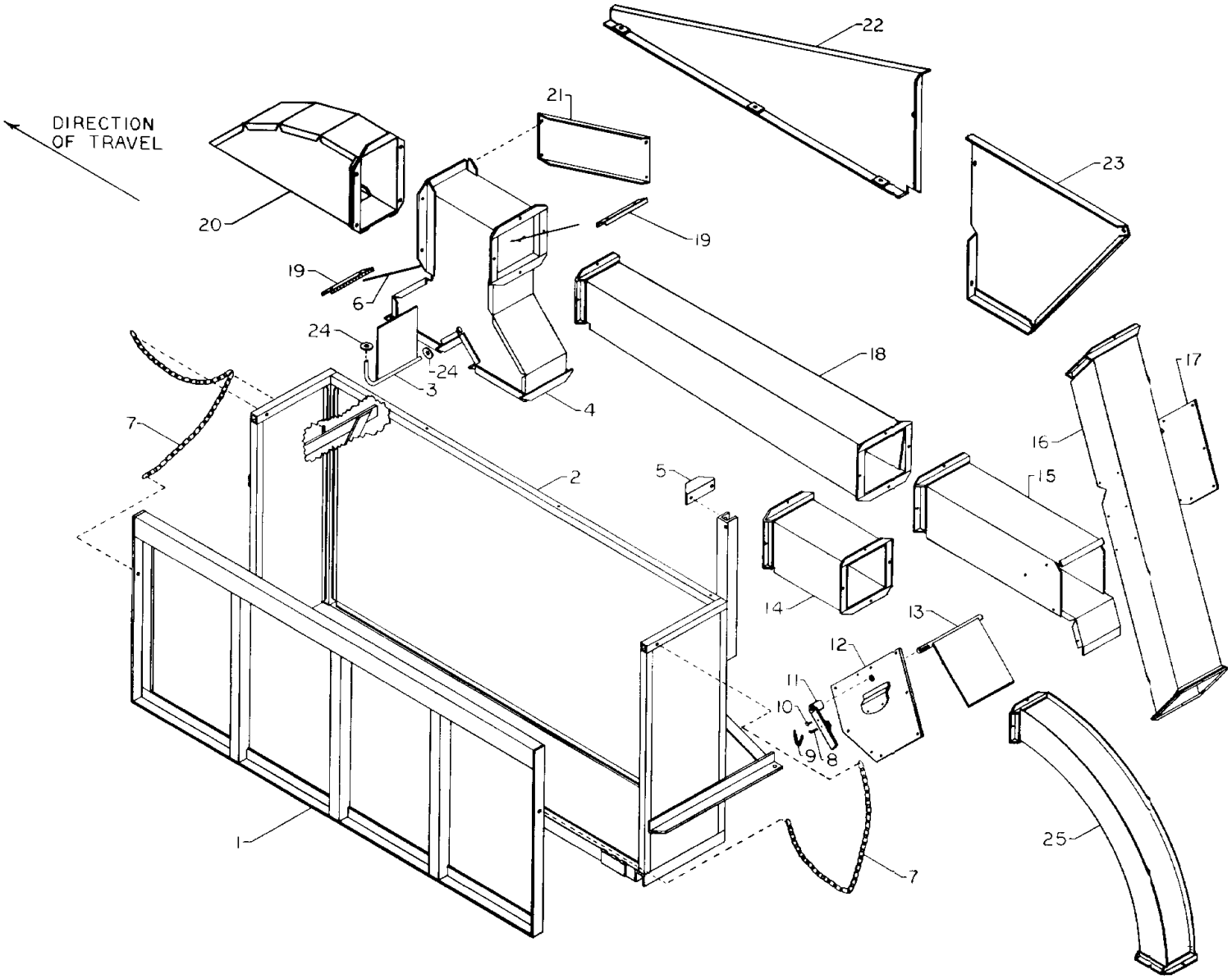
DIRECTION
OF TRAVEL
1
2
3
4
5
6
7
7
8
9
10
11
12
13
14
15
16
17
18
19
19
20
21
22
23
24
24
25

10. BAGGER ATTACHMENT

NO.	PART NO.	KEYWORD	DESCRIPTION	NO. REQ'D
1	12934	DOOR	BAGGING STAND	1
2	12935	STAND	BAGGING	1
3	6468	VALVE	BAG FILLER	1
4	12912	FILLER	ASS'Y. BAG	1
5	6475	ANGLE	EXTENSION	1
6	2136	FINGER	SCREENING (FOR VIRGINIA PEANUTS)	14
--	2136	FINGER	SCREENING (FOR SPANISH PEANUTS)	16
7	4293-36	CHAIN	3/16" ATTACHING; 36 LINKS	2
8	2200	PIN	COTTER, 1-1/4" LONG X 3/16"	1
9	4292-7	CHAIN	CHECK; 7 LINKS	1
10	2201	PIN	COTTER; 5/8" LONG X 3/16"	1
11	6515	HANDLE	ADJUSTING	1
12	12916	PLATE	LEFT SIDE REINFORCING	1
13	6466	VALVE	DIRECTIONAL FLOW	1
14	12941	PIPE	EXTENSION CONVEYOR	1
15	12917	PIPE	INTERSECTING CONVEYOR	1
16	12918	PIPE	BYPASS CONVEYOR	1
17	12915	PLATE	RIGHT SIDE REINFORCING	1
18	12913	PIPE	TAPERED CONVEYOR	1
19	120212	PLATE	FINGER MTG. (VIRGINIA PEANUTS)	2
--	120131	PLATE	FINGER MTG. (SPANISH PEANUTS)	2
20	120216	PIPE	DISCHARGE CONVEYOR	1
21	12938	MOUNT	HOPPER	1
22	120009	SHIELD	LEFT FRONT CHAIN	1
23	12937	SHIELD	LEFT REAR CHAIN	1
24	6120396	WASHER	1/2" FLAT	2
25	12939	PIPE	LARGE CURVED CONVEYOR	1

NOTE: When a basket and a bagger attachment are installed in the same machine do not use part numbers 25 and 14. When only a bagger attachment is used it is not necessary to use parts 8 - 13 and 15 - 17.

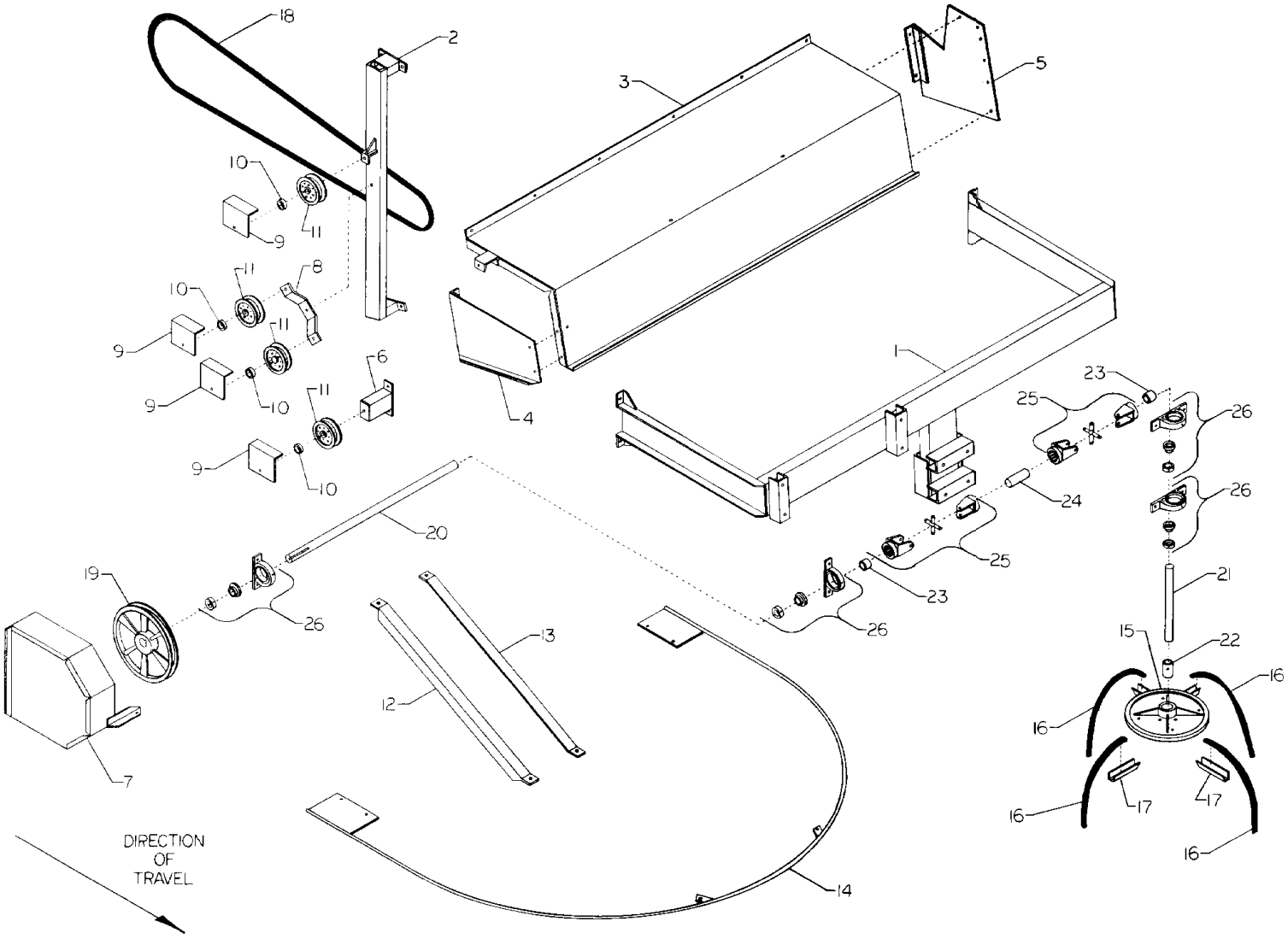
18
2
3
5
10
9
11
8
6
4
1
23
25
26
24
20
19
7
13
12
21
15
22
16
17
14
DIRECTION
OF
TRAVEL

19. VINE-SPREADER KIT SECTION

NO.	PART NO.	KEYWORD	DESCRIPTION	NO. REQ'D
1	9901	FRAME	ROTOR	1
2	9869	BRACKET	IDLER MOUNTING	1
3	121167	SHIELD	VINE-SPREADER, REAR	1
4	121165	PLATE	SIDE HOOD, LEFT	1
5	121166	PLATE	SIDE HOOD, RIGHT	1
6	60016	MOUNT	IDLER	1
7	121164	SHIELD	VINE-SPREADER, FOR PULLEY	1
8	9152	BRACKET	IDLER MOUNTING	1
9	121162	SHIELD	IDLER	4
10	2373	SPACER	IDLER	4
11	5317	IDLER	3" WHEEL	4
12	9899	ANGLE	ROTOR GUARD MOUNTING, LEFT	1
13	9900	ANGLE	ROTOR GUARD MOUNTING, RIGHT	1
14	9898	GUARD	ROTOR	1
15	5401	HUB	ROTOR FOR VINE-SPREADER	1
16	4385	STRIP	ROTOR	4
17	121163	PLATE	ROTOR STRIP MOUNTING	4
18	B225	BELT	"V" FOR VINE-SPREADER	1
19	5509	SHEAVE	188.75 OD FOR 1" BORE	1
20	10111	SHAFT	DRIVE	1
21	10040	SHAFT	VINE-SPREADER	1
22	2170	BUSHING	ROTOR HUB	1
23	2092	BUSHING	1" ID X 1-1/8" LONG	2
24	10112	SHAFT	JOINT	1
25	11023	JOINT	UNIVERSAL	2
--	11023A	YOKE	UNIVERSAL JOINT	2
--	11005	JOURNAL	SPIDER	2
--	11023B	YOKE	UNIVERSAL JOINT	2
26	3101	BEARING	1" PILLOW BLOCK	4
--	3095	INSERT	1" REPLACEMENT BEARING	4
--	3030	COLLAR	1" ECCENTRIC LOCKING	4

NUMERICAL PARTS INDEX

PART NO.	PAGE	PART NO.	PAGE	PART NO.	PAGE
10040	37	120130	17	120605	15
10044	23	120131	35	120638	9
10047	11,13	120142	23	120639	9
10051	9	120212	35	1207	32
10058	5	120213	23	120718	9
1009	3	120216	35	120745	9
10101	13	12029	17	120746	9
10104	21	120294	17	120774	25
10107	19	120295	17	120775	25
10108	23	120296	9	120776	27
10110	17	120297	9	120777	27
10111	37	120298	25	120778	27
10112	37	1203	30,33	120999	5
10142	13	120302	19	121050	15
10151	25	120303	19	121102	9
10223	3	120304	9	121162	37
1030	19	120305	9	121163	37
1055	33	120306	21	121164	37
1063	17,31	120307	21	121165	37
1075	32,33	120379	9	121166	37
1079	33	120425	27	121167	37
11005	37	120426	27	121406	3
11013A	7	120427	27	121407	3
11014	7	120428	27	1215	11,13
11015A	7	120429	27	1219	30,32
11021	5	120430	27	1223	33
11022	5	120431	27	1231	30,31
11023	37	120432	27	12504	19
11023A	37	120433	27	12520	19
11023B	37	120434	27	12521	19
11050	5	120435	27	12522	19
11058	7	120436	27	12530	17
11082	7	120438	27	12531	17
11083	7	120439	27	12532	17
11084	7	120440	27	12548	19
11085	7	120441	27	1255	33
11086	7	120442	27	12551	27
11087	7	120443	27	12552	27
11088	7	120444	27	12570	25
11089	7	120453	9	12576	25
11090	7	120454	9	12577	25
11091	7	120455	9	12578	25
1135	32	120456	9	12579	25
1147	5	120468	5	12586	9
120008	13	120469	9	12589	9
120009	35	120470	9	12590	9
120119	27	120471	9	12610	3
120120	17	120472	9	12612	19
120121	25	120473	9	12613	19
120122	25	120474	9	12614	19
120123	25	120475	9	12803	25
120124	25	120476	9	12804	25
120125	25	120477	5	12805	25
120126	25	120478	5	12806	25
120127	21	120583	19	12810	25
120128	17	120601	15	12815	25

NUMERICAL PARTS INDEX

PART NO.	PAGE	PART NO.	PAGE	PART NO.	PAGE
12816	25	12894	9	2136	35
12817	25	12898	17	2141	23
12818	25	12912	35	2148	23
12819	25	12913	35	2154	21,23
12820	27	12915	35	2164	15
12823	15	12916	35	2170	37
12824	15	12917	35	2173	29
12825	15	12918	35	2174	29
12826	15	12934	35	2176	29
12827	15	12935	35	2188	25
12828	15	12937	35	2193	29
12830	15	12938	35	2195	25
12831	15	12939	35	2199	25
12832	11	12941	35	2200	35
12833	11	12942	23	2201	35
12834	11	1395	5	2211	29
12835	11	14000	29	2214	3
12836	11	14001	29	2217	15
12837	13	14002	29	2218	15
12841	21	14003	29	2222	33
12842	19	14006	15	2274	5
12843	19	14007	29	2281	15
12844	19	14023	29	2306	25
12845	19	14024	29	2373	37
12846	19	14050	32	2490	3
12847	19	1406	29	2536	32
12850	19	2003	25	3001	17,23
12851	19	2009	25	3005	3,17,23,32,33
12852	19	2015	15	3010	3
12853	19	2020	5	3017	19,21,23
12854	19	2031	31	3029	30,31,32,33
12855	19	2032	5	3030	19,23,25,33,37
12856	23	2035	30	3061	19
12857	23	2036	30,31	3074	23
12858	23	2037	15	3077	5
12859	23	2038	15	3080	31,32
12860	23	2041	15	3091	5,31,32
12861	23	2042	15	3092	30,31,32,33
12862	19	2046	29	3093	32,33
12863	19	2047	29	3094	25,33
12864	19	2048	29	3095	19,23,25,33,37
12865	9	2050	5	3096	3,17,23,32,33
12866	9	2052	15,23	3097	5
12867	9	2053	15,23	3098	31,32
12868	9	2076	23	3099	30,31,32,33
12875	9	2077	31	3101	19,23,25,37
12876	9	2078	32	3102	23
12877	9	2079	32	3103	23
12878	9	2080	33	3104	3
12880	9	2082	21	3105	30,32
12883	9	2083	5,19	3570	33
12889	9	2092	37	4043-103	31
12890	9	2095	13	4043-174	31
12891	9	2099	17	4043B-127	31
12892	9	2133	27	4044	19,21,23
12893	9	2134	25	4076	15,23

NUMERICAL PARTS INDEX

PART NO.	PAGE	PART NO.	PAGE	PART NO.	PAGE
4078	19	5517	30	6179	23
4189	19	5518	33	6181	25
4263	25	5521	33	6182	27
4264	15	5522	33	6195	19
4265	21	60016	37	6196	23
4266	21	60178	3	6247	23
4284-123	33	60179	5	6260	9
4292-7	35	6047	11,13,15	6261	5
4293-36	35	6049	19	6262	5
4294-4	25	6050	19	6264	9
4305	5	6051	19	6303	3
4385	37	6053	19	6304	19
5010	33	6054	9	6308	5
5050	33	6063	5	6316	23
5051	33	6064	5	6433	19
5055	31	6069	19	6466	35
5058	33	6071	23	6468	35
5060	33	6072	23	6475	35
5088	33	6078	15	6479	13
5089	32	6080	15	6515	35
5090	25,33	6081	15	6587	25
51001	33	6082	15	6588	25
51011	33	6083	15	6589	25
51021	30	6084	15	6590	25
5113	30	6086	17	6591	25
5114	30	6087	17	6592	21
5133	31	6088	17	6593	21
5150	23	6089	17	6594	21
5152	30	6092	17	6595	21
5153	11	6094	15	6598	9
5180	30	6095	13	6658	23
5185	33	6097	11,13	6659	21
5187	32	6099	3	6661	23
5205	32	6111	17	6662	21
5207	31,33	6112	17	6663	21
5208	33	6114	19	6665	23
5209	30,31,32	6134	9	6666	19,21,23
5210	32	6155	25	6668	19
5211	32	6156	25	6669	23
5218	32	6157	25	6670	9
5317	37	6158	25	6726	21
5327	13	6159	25	6727	5
5363	17	6161	25	6747	25
5376	13	6162	25	6748	5
5391	33	6165	15	6749	5
5401	37	6166	15	6750	9
5501	33	6167	15	6816	15
5504	32	6168	15	6817	15
5505	33	6170	11	6819	15
5506	33	6171	21	6821	15
5507	31	6173	19	6868	15
5508	33	6174	19	6905	5
5509	37	6175	23	6924	29
5510	31	6176	23	6925	29
5515	32	6177	23	6929	15
5516	32	6178	23	6930	15

PART NO.	PAGE	PART NO.	PAGE	PART NO.	PAGE
7003	11	9734	29	G271776	29
7008	11,13,15	9735	29	G272324	23
7012	5	9736	29	G426897	29
7013	15	9737	29		
7018	15	9738	29		
7019	15	9739	29		
7024	5,09	9740	29		
7028	3	9741	29		
7038	15	9742	29		
7039	29	9743	29		
7040	15	9744	29		
7049	3	9746	27		
8012	6	9750	5		
8013	6	9848	5		
8014	6	9849	27		
8015	6	9850	29		
8016	6	9869	37		
8017	6	9898	37		
8018	6	9899	37		
8019	6	9900	37		
8021	6	9901	37		
8022	6	B136	33		
8023	6	B225	37		
8039	6	BB128	31		
8040	6	C112	33		
90049	3	C144	33		
90050	5	C148	33		
9152	37	G102870	25		
9346	5	G102872	17		
9347	5	G102896	17		
9348	6	G120369	15		
9350P	5	G120375	17		
9350Q	5	G120376	17,29		
9353	5	G120377	17		
9418C	23	G120378	13		
9501	5	G120380	17		
9502	23	G120383	11,13		
9508	27	G120396	15,35		
9508B	27	G121358	19,21,23		
9511	15	G121574	19		
9512	15	G124944	3,19		
9513	5	G126177	17,23		
9516	15	G126373	29		
9517AA	5	G131016	3,30		
9523	5	G131017	29		
9524	5	G138290	30		
9526	5	G180022	17		
9528	3	G180034	19		
9530	5	G180079	17		
9531	5	G180157	11,13		
9669	21	G180177	13		
9679	6	G180185	5		
9707	5	G181713	19		
9708	5	G220086	29		
9709	5	G271501	11,13		
9710	5	G271773	29		