3rd Edition

HOBBS

MODEL 522 PEANUT COMBINE

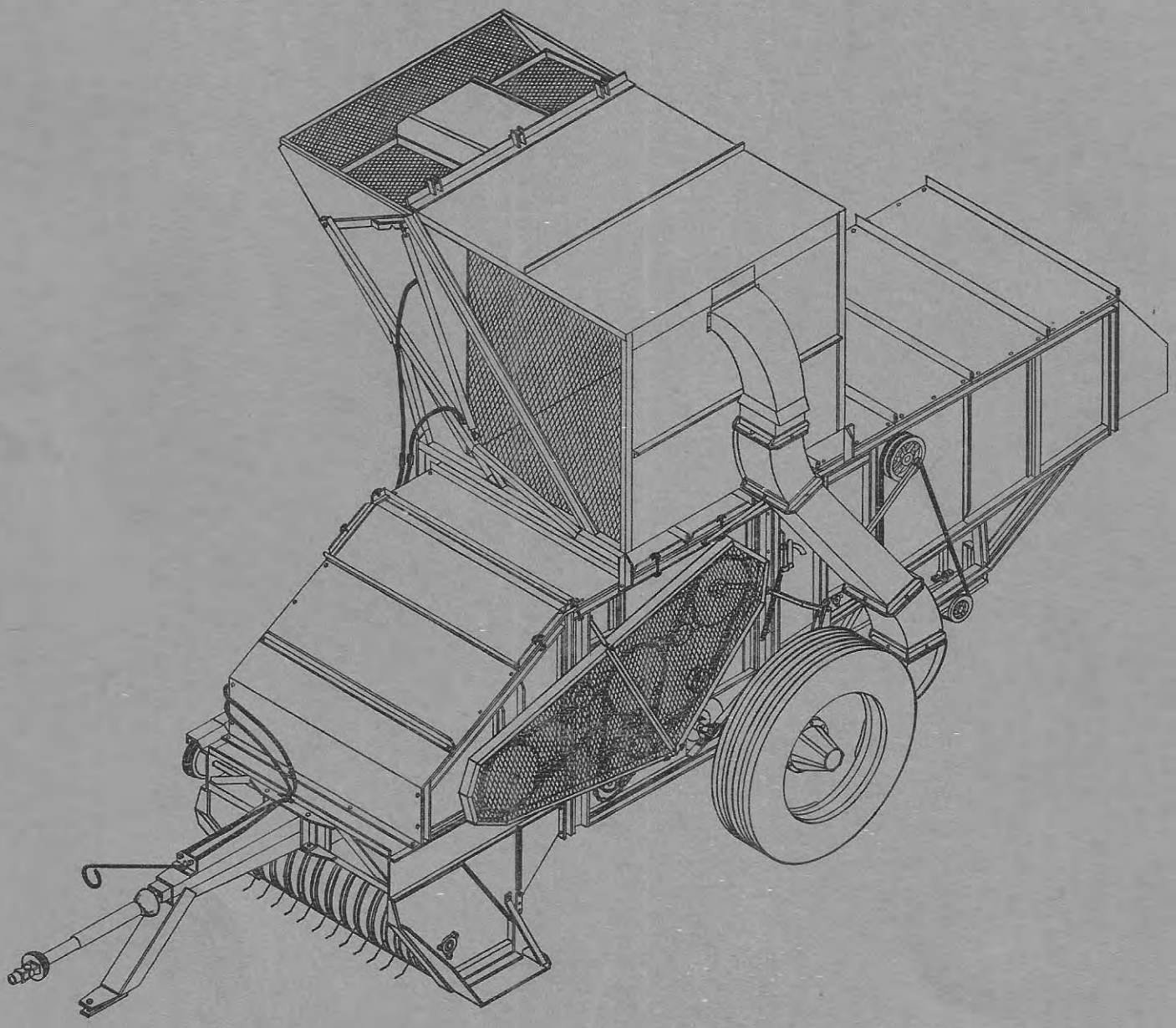

PARTS CATALOG

HOBBS ENGINEERING CO. SUFFOLK, VA., U. S. A.

HOBBS

MODEL 522 PEANUT COMBINE
PARTS CATALOG
CONTENTS

	PAGE
HEADER SECTION	3
FRAME SECTION	5
WHEEL BEARING SECTION	7
COVER & SHIELD SECTION	9
FRONT CYLINDER SECTION	11
MIDDLE & REAR CYLINDER SECTION	13
CONCAVE & AUTOMATIC ADJUSTING SECTION	15
CLEANING FAN SECTION	17
CLEANING SHOE SECTION	19
STRAW RACK SECTION	21
STEMMER SECTION	23
PNEUMATIC CONVEYOR SECTION	25
BASKET SECTION	27
BASKET FRAME SECTION	29
DRIVE SECTION, LEFT SIDE	31
DRIVE SECTION, RIGHT SIDE	33
VINE SPREADER SECTION (OPTIONAL)	35
BAGGER ATTACHMENT (OPTIONAL)	37
NUMERICAL INDEX	38 , 39
WARRANTY	40

NOTE:

NOTE: **The words "left" and "right" used in the description of parts should be taken as seen facing the direction of travel of the machine, unless otherwise noted.** The "front" of the machine is the end which attaches **to the tractor.**

August 9, 1974

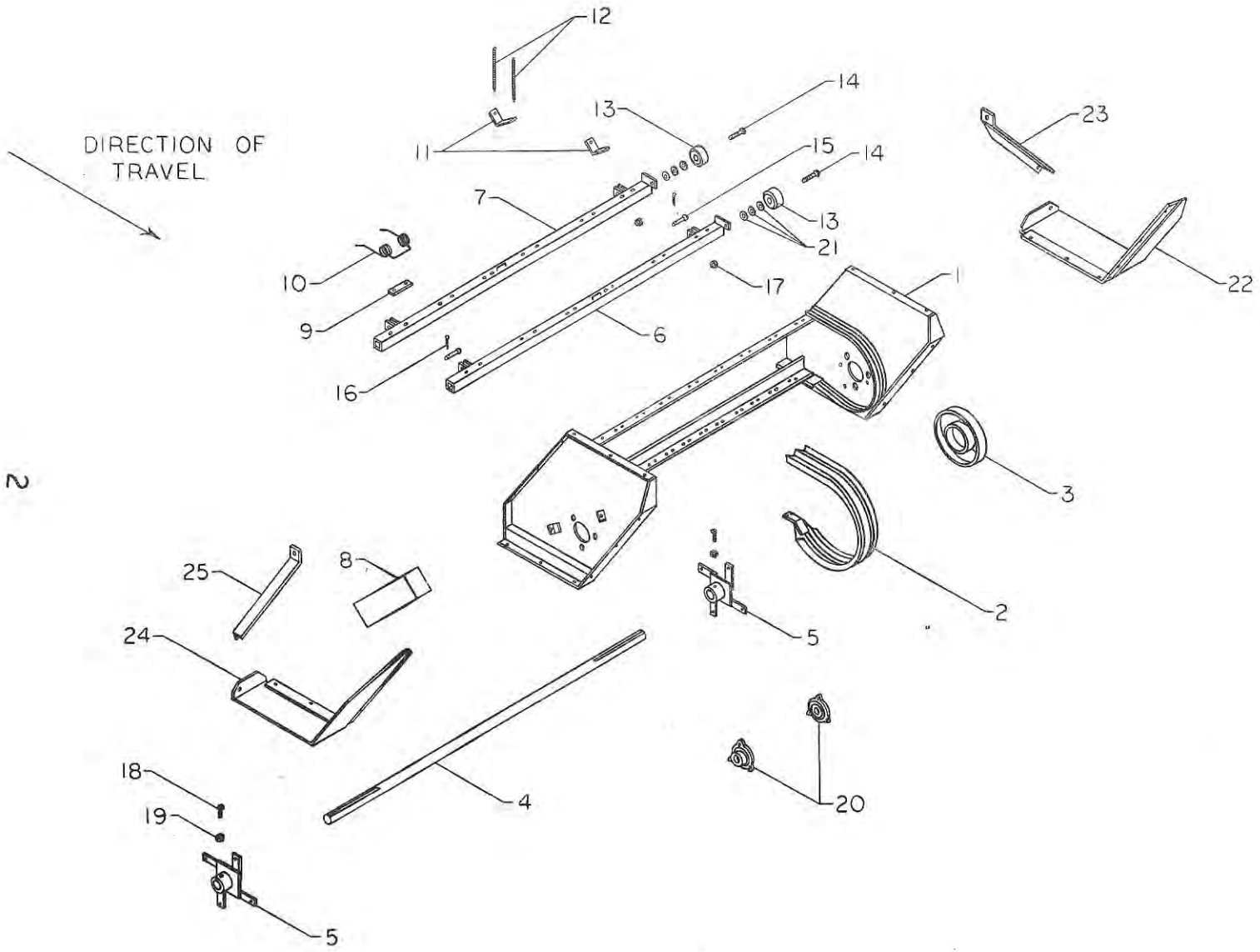
DIRECTION OF TRAVEL
12
11
13
14
15
14
13
21
7
10
9
16
6
17
1
23
22
3
2
5
8
25
24
4
18
19
5
20

HEADER SECTION

No.	Part No.	Description	No. Req'd
1	9527	Frame, Header Assembly	1
2	12610	Band, Header	11
3	9528	Track, Roller	1
4	10050	Shaft	1
5	6099	Rotor, Bar Mounting	2
-	--	Keystock, 1/4 x 1/4 x 1-1/2	2
6	6301	Header Bar, Left Mounted Spring Clip	2
7	6300	Header Bar, Right Mounted Spring Clip	2
8	12611	Cover, Header Drive Sprocket	1
9	6303	Retainer, Spring	24
10	7028	Spring, Header Pick-Up	24
11	6302	Clip, Spring Attaching	4
12	7014	Spring, Header Bar Expansion	4
13	3010	Bearing	4
14	--	Cap Screw, 5/8" - 11 x 1-1/2", USS	4
15	1009	Pin, Bar Ass'y Mounting	8
16	--	Cotter Pin, 3/32" x 3/4"	8
17	--	Nut, 5/8" - 11 USS Hex	4
18	--	Set Screw, 3/8" - 16 x 1-1/4", USS Square Head	2
19	--	Nut, 3/8" - 16, USS Hex	2
20	3018	Bearing, 1-3/16" 3 Hole Flange	2
21	--	Washer, 5/8"	12
22	12887	Shoe Extension, Left Side	1
23	6258	Brace, Header Extension, Left	1
24	12888	Shoe Extension, Right Side	1
25	6259	Brace, Shoe Extension, Right	1

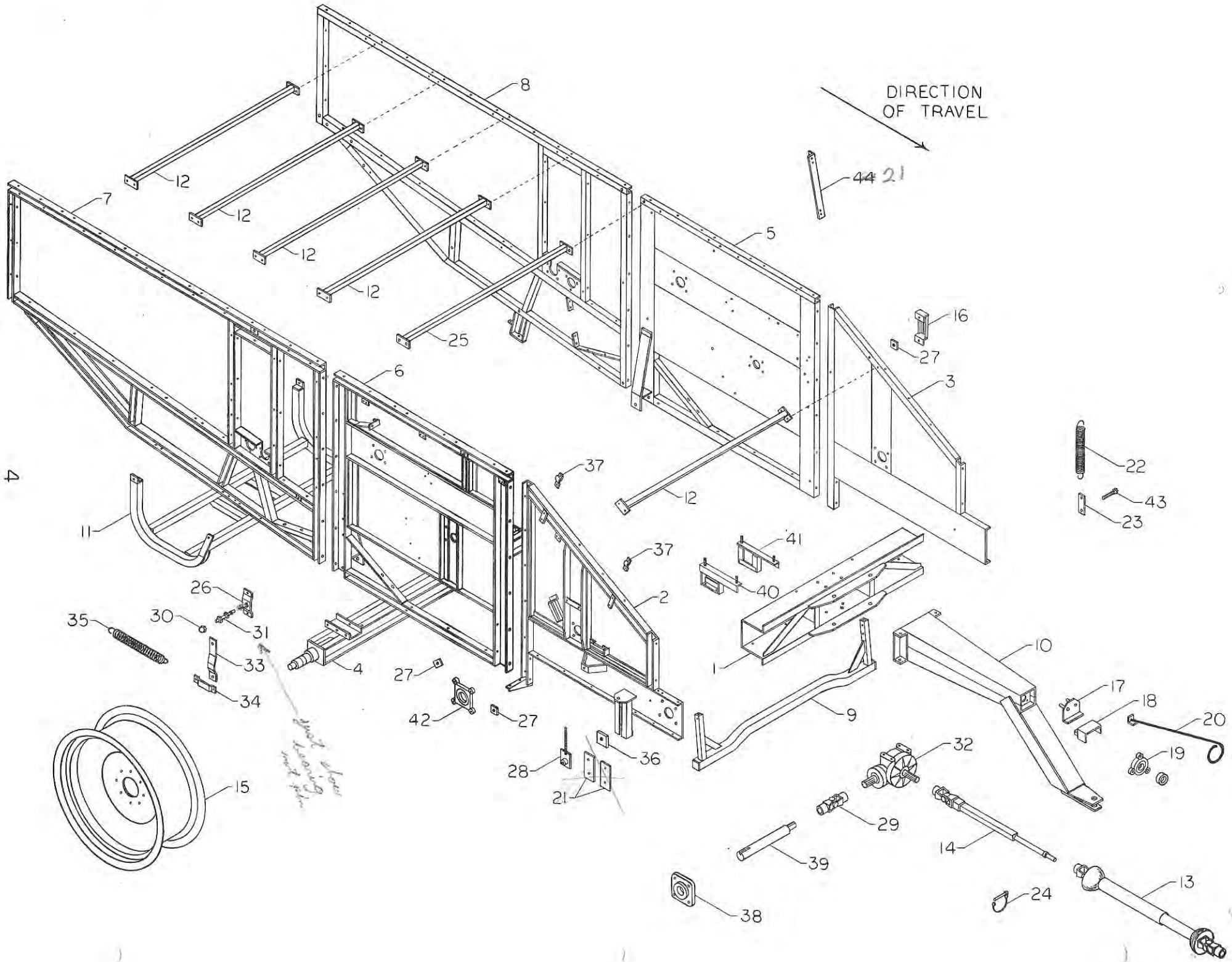
DIRECTION OF TRAVEL
1
2
3
4
5
6
7
8
9
10
11
12
13
14
15
16
17
18
19
20
21
22
23
24
25
26
27
28
29
30
31
32
33
34
35
36
37
38
39
40
41
42
43
44

FRAME SECTION

No.	Part No.	Description	No. Req'd
1	9517-AA	Frame Section, Gearbox Mounting	1
2	9347	Frame Section, Front Side, Right	1
3	9346	Frame Section, Front Side, Left	1
4	9348	Axle	1
5	9349	Frame Middle Section, Left	1
6	9350	Frame Middle Section, Right	1
7	9351	Frame Section, Right Rear	1
8	9352	Frame Section, Left Rear	1
9	9523	Jack Stand	1
10	9501	Tongue Assembly	1
11	9513	Guard, Duct	1
12	9524	Support Bar, Top, Front & Rear	5
13	11012	Drive Ass'y, Complete PTO	1
14	11021	Shaft, Main Drive & Universal Joint	1
15	8021	Wheel, 9" x 24"	2
--	8022	900 x 24 Rib Implement Tire	2
--	8023	900 x 24 Implement Tube	2
16	6221	Idler Mount & Adjusting Ass'y	1
17	9530	Coupler Ass'y, Hydraulic Hose	1
18	9531	Shield	1
19	3025	Bearing, 1-3/8", 3 Hole Flange	1
20	6063	Holder, Hydraulic Line	1
21	~~9532~~ 9526	~~Pad, Bearing Mtg.~~ ANGLE BRACE	~~2~~ 1
22	7012	Spring, Jack Lift	1
23	6308	Spring Connector, Jack Stand	1
24	2050	Lock Pin, Universal Drive	1
25	9353	Support Bar, Top Center	1
26	6310	Plate, Idler Mtg.	1
27	2020	Retainer, Idler Tightening Bolt	3
28	6135	Screw & Plate Ass'y, Drive Belt Idler	1
29	11022	Joint, Universal	1
30	1011	Nut, Acorn, 3/4" SAE	1
31	3059	Bearing	1
32	11050	Gearbox	1
33	6312	Idler Arm	1
34	6315	Link, Spring Connecting	1
35	7019	Spring	1
36	6055	Bolt Retainer, Drive Belt Idler	1
37	6064	Clamp, Hydraulic Line	2
38	3006	Bearing, 1-11/16", 4 Hole Flange	1
39	10058	Shaft, Gearbox Output	1
40	6261	Hydraulic Pump Mount, Right	1
41	6262	Hydraulic Pump Mount, Left	1
42	3020	Bearing with collar, 1-11/16", 4 Hole Flange	2
43	1013	Full Thread 1/2" x 2-1/2" USS Bolt	1
~~44~~	~~9526~~	~~Angle Brace~~	~~1~~

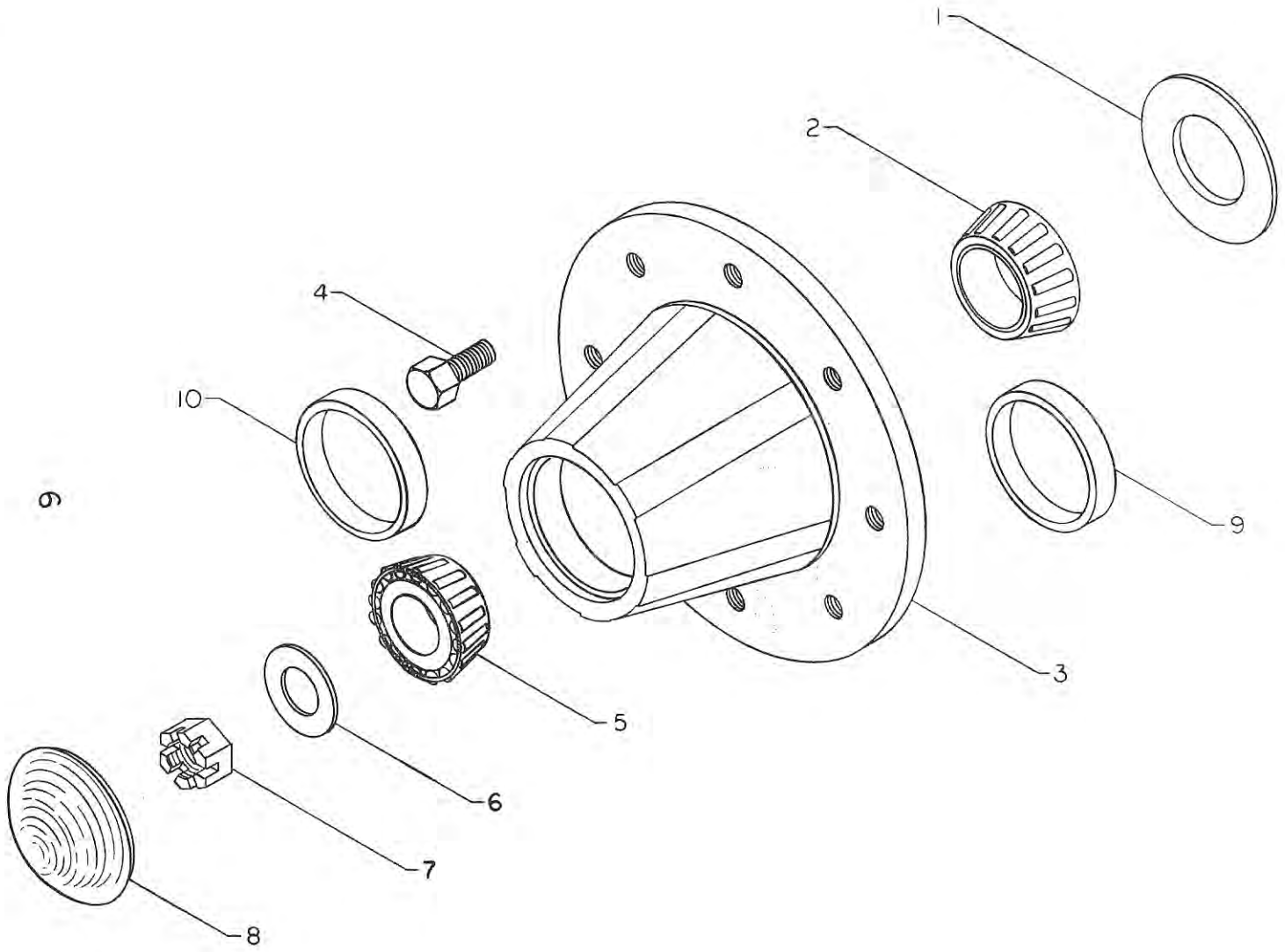
1
2
3
4
5
6
7
8
9
10

WHEEL BEARING SECTION

No.	Part No.	Description	No. Req'd
1	8015	Seal	2
2	8013	Cone, Bearing, #25590	2
3	8012	Hub & Cup Ass'y	2
4	8017	Bolt, Lug	16
5	8014	Cone, Bearing, #25877	2
6	8018	Washer, Spindle	2
7	8019	Nut, Castle	2
8	8016	Cap, Hub	2
9	8039	Cup, Bearing Inner, ~~(332)~~ (25520)	1
10	8040	Cup, Bearing Outer, ~~(14276)~~ (25821) ~~use (25821)~~	1

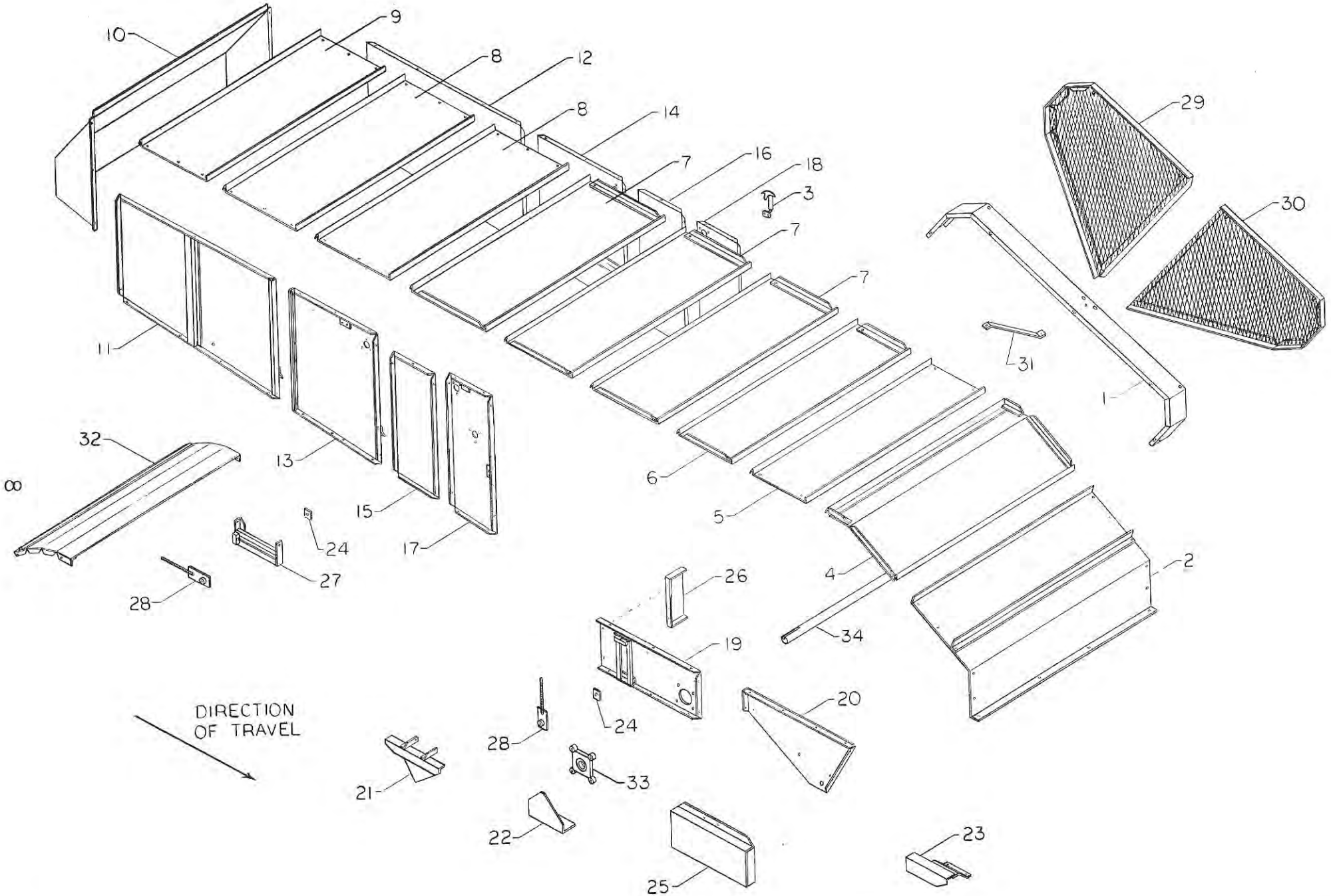
10
9
8
12
8
14
7
16
18
3
7
7
29
30
11
31
1
32
13
6
5
15
24
17
27
28
4
2
26
34
19
20
DIRECTION
OF TRAVEL
24
28
33
21
22
23
25

COVER AND SHIELD SECTION

No.	Part No.	Description	No. Req'd
1	12892	Shield, Top Section	1
2	12881	Top, 1st Section	1
3	7024	Fastener, Spring Loaded	14
4	12889	Top, 2nd Section	1
5	12586	Top, 3rd Section	1
6	12890	Top, 4th Section	1
7	12891	Top, 5th & 6th & 7th Section	3
8	12589	Top, Straw Rack, Cover Sections	2
9	12590	Top, Rear Section	1
10	12503	Hood	1
11	12877	Rear Straw Rack Side Cover, Right	1
12	12878	Rear Straw Rack Side Cover, Left	1
13	12875	Front Straw Rack Side Cover, Right	1
14	12876	Front Straw Rack Side Cover, Left	1
15	12873	Straw Rack Drive Side Cover, Right	1
16	12874	Straw Rack Drive Side Cover, Left	1
17	12869	Beater Cylinder Side Cover, Right	1
18	12870	Stripper Cylinder Side Cover, Left	1
19	12867	Bottom Side Cover, Right	1
--	12868	Bottom Side Cover, Left	1
20	12865	Lower Side Cover, Right	1
--	12866	Lower Side Cover, Left	1
21	12897	Shield, Cleaning Fan Drive	1
22	12514	Shield, Drive Belt, Rear	1
23	12895	Shield, Drive Belt, Front	1
24	6054	Bolt Retainer, Idler Tightener	2
25	12896	Shield, Header Drive	1
26	12883	Deflector	2
27	6198	Belt Adjustor, Frame Ass'y, Straw Rack Drive	1
28	6134	Belt Adjustor, Screw & Plate Ass'y	2
29	12894	Shield, Cylinder Drive Chain, Rear Section	1
30	12893	Shield, Cylinder Drive Chain, Front Section	1
31	6260	Brace, Cylinder Drive, Top Section	1
32	12880	Deflector, Light Chaff	1
33	3023	Bearing with collar, 1-11/16", 4 Hole Flange	2
34	10051	Countershaft	1

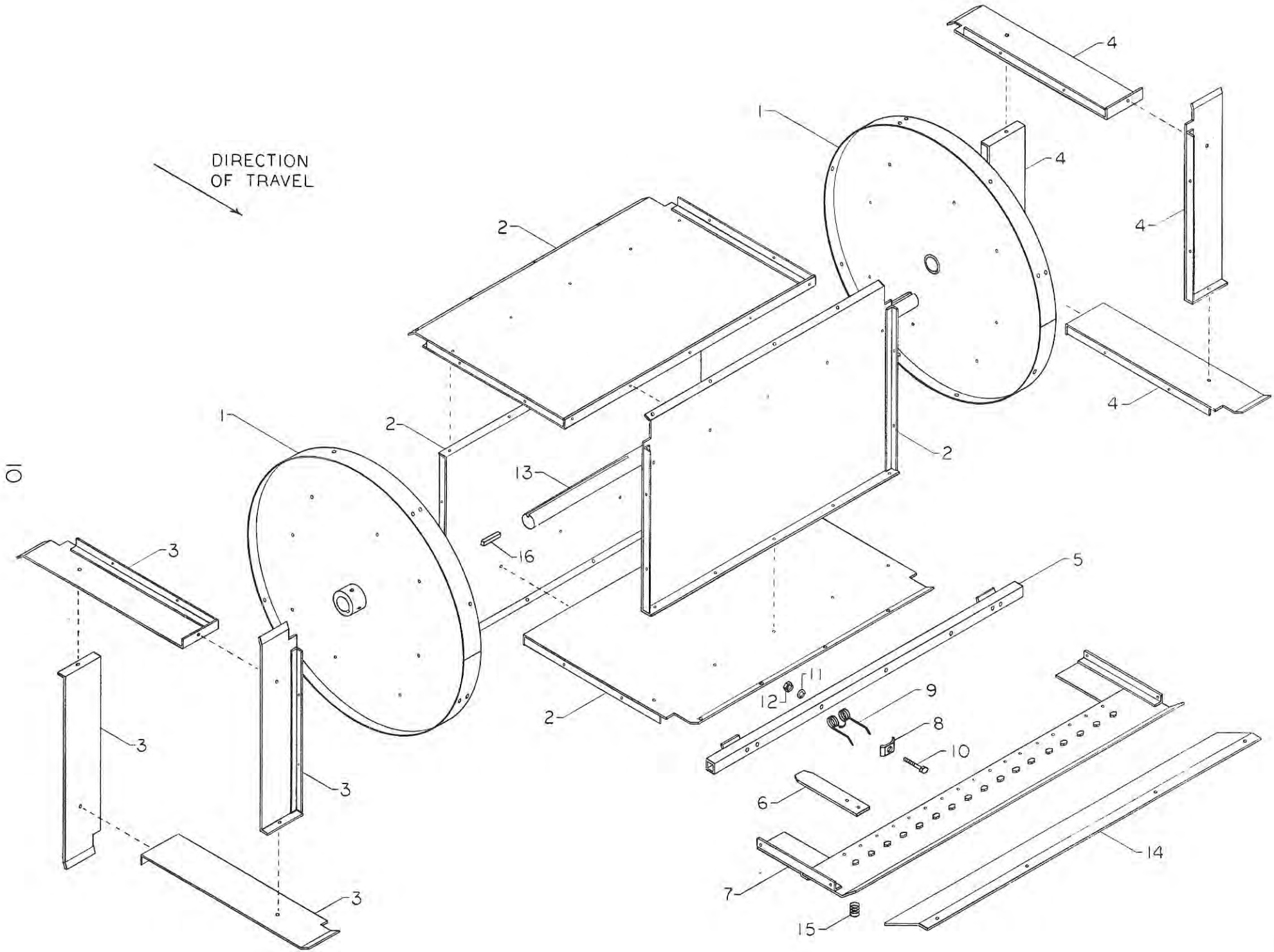
DIRECTION
OF TRAVEL
1
2
3
4
5
6
7
8
9
10
11
12
13
14
15
16

FRONT CYLINDER SECTION

No.	Part No.	Description	No. Req'd
1	5153	Head, Cylinder	2
2	12832	Cylinder Section, Center	4
3	12833	Cylinder Section, Right	4
4	12834	Cylinder Section, Left	4
5	6169	Bar, Front Cylinder	8
6	6170	Vine Guide	17
7	12835	Frame Ass'y, Vine Guide	1
8	6047	Retainer, Picking Spring	40
9	7008	Spring, Picking	40
10	--	Screw, 7/16" - 14 x 2-1/2" USS Cap	56
11	--	Lockwasher, 7/16"	56
12	--	Nut, 7/16" - 14 USS Hex	56
13	10102	Shaft, Front Cylinder	1
14	12836	Deflector	1
15	7003	Spring, Vine Guide Retaining	17
16	--	Keystock, 3/8 x 3/8 x 2-1/2	2

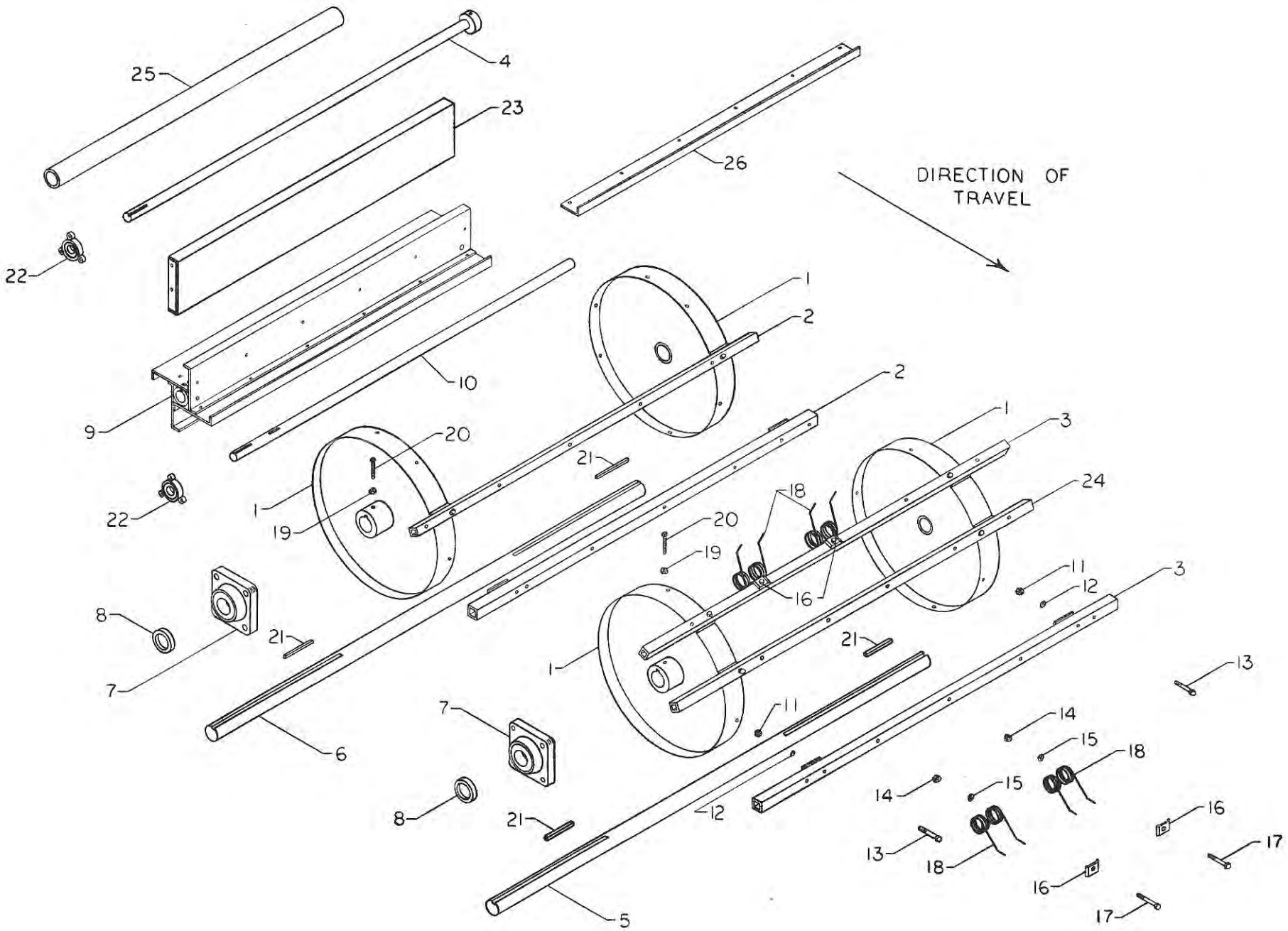
DIRECTION OF TRAVEL
1
2
3
4
5
6
7
8
9
10
11
12
13
14
15
16
17
18
19
20
21
22
23
24
25
26

MIDDLE AND REAR CYLINDER SECTION

No.	Part No.	Description	No. Req'd
1	5327	Head, Cylinder	4
2	6097	Bar, #2 Cylinder	10
3	6095	Bar, #1 Cylinder; for 5 Springs	5
4	10101	Shaft, Cleaning Shoe Oscillation Drive	1
5	10047	Shaft, #1 Cylinder	1
6	10103	Shaft, #2 Cylinder	1
7	3024	Bearing with collar, 1-11/16", 4 Hole Flange	4
8	3029	Collar, 1-11/16", Eccentric Locking	4
9	5329	Cylinder, Stripper	1
10	10123	Shaft, Stripper Cylinder	1
11	--	Nut, 7/16" - 14 USS Hex	40
12	--	Lockwasher, 7/16"	40
13	--	Screw, 7/16" - 14 x 2-1/2" USS Cap	40
14	--	Nut, 7/16" - 14 USS Hex	100
15	--	Lockwasher, 7/16"	100
16	6047	Retainer, Picking Spring	100
17	--	Screw, 7/16" - 14 x 2-1/2" USS Cap	100
18	7008	Spring, Picking	100
19	--	Nut, 1/2" - 13 USS Hex	4
20	--	Setscrew, 1/2" - 13 x 1-1/4" USS	4
21	--	Key, 3/8" x 2-1/2"	4
22	3057	Bearing with collar, 1", 3 Hole Flange	4
23	12837	Deflector	1
24	6479	Bar, #1 Cylinder; for 5 Springs	5
25	2095	Cleaning Shoe Drive Shaft Sleeve	1
26	120008	Blade Reinforcement	4

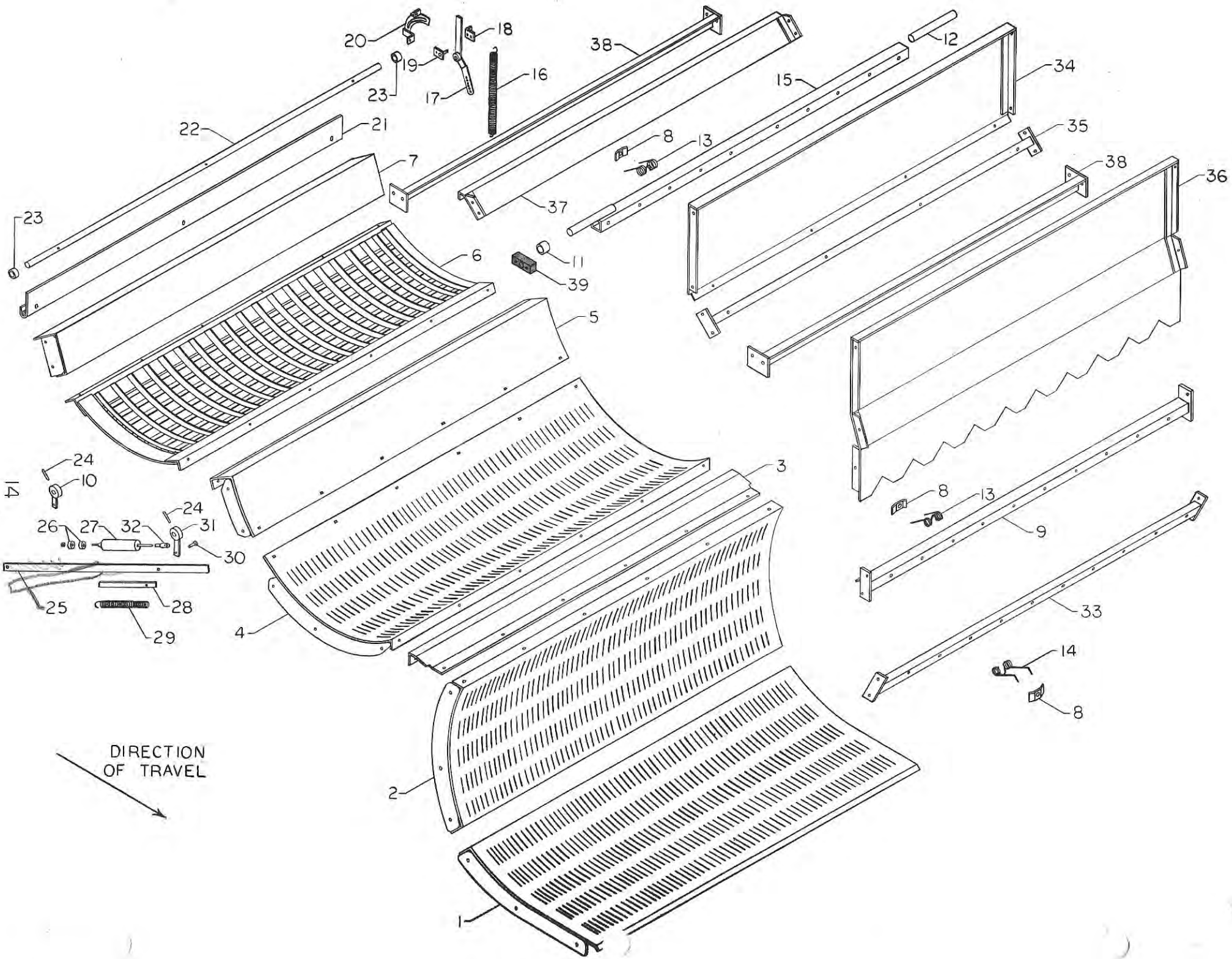
20
18
19
23
17
16
38
12
34
15
22
21
7
8
13
35
38
36
37
23
6
11
39
5
3
24
10
24
26
27
32
31
30
25
28
29
4
8
13
9
33
14
8
DIRECTION
OF TRAVEL
2
1

CONCAVE AND AUTOMATIC ADJUSTING SECTION

No.	Part No.	Description	No. Req'd
1	12823	Concave Screen, 1st Section	1
2	12824	Concave Screen, 2nd Section	1
3	12827	Frame Section, Concave Attaching, Middle Front	1
4	12825	Concave Screen, 3rd Section	1
5	12828	Frame, Concave Attaching, Middle Rear	1
6	12822	Separator, Concave Assembly	1
7	12826	Frame, Separator, Concave Attaching	1
8	6047	Retainer, Picking Spring	30
9	9516	Bar, Deflector Spring Mounting	1
10	6083	Crank Arm, Picking Control, Driven	1
11	2037	Spacer, Load Sensor Bar	2
12	6165-B	Shaft, Sensor Bar End (welds on after ass'y machine)	1
13	7018	Spring, Double Torsion, Straight Leg	20
14	7008	Spring, Double Torsion Crooked Leg, Picking	10
15	6165	Bar, Load Sensing Spring Mounting	1
16	7013	Spring, Picking, Control Adjusting	1
17	6094	Handle, Picking, Control Adjusting	1
18	9511	Stop, Control Handle	1
19	9512	Retainer, Control Handle Stop	1
20	6081	Quadrant, Control Handle Stop	1
21	6084	Board, Picking Control	1
22	6078	Shaft, Picking Control Board	1
23	2038	Spacer, Picking Control Board Shaft	2
24	2015	Spring Roll Pin, 1/4 x 1-3/4	2
25	6168	Link, Automatic Picking Control, Secondary	1
26	4076	Bushing, Control Cylinder Attaching	2
27	14006	Cylinder, Picking Control	1
28	6080	Link, Automatic Picking Control, Primary	1
29	7019	Spring, Automatic Adjusting Link Override	1
30	2042	Clevis Pin, 3/8" x 1-3/32"	1
31	6082	Crank Arm, Picking Control Drive	1
32	2041	Clevis, 3/8" SAE	1
33	6166	Bar, Picking Spring Mounting, Stationary	1
34	12829	Divider, Third Stage, Picking	1
35	6167	Bar, Divider Stiffening	1
36	12830	Divider, Second Stage, Picking	1
37	12831	Guard, Load Sensor	1
38	9525	Bar, Stripper	2
39	4264	Wear Block	2

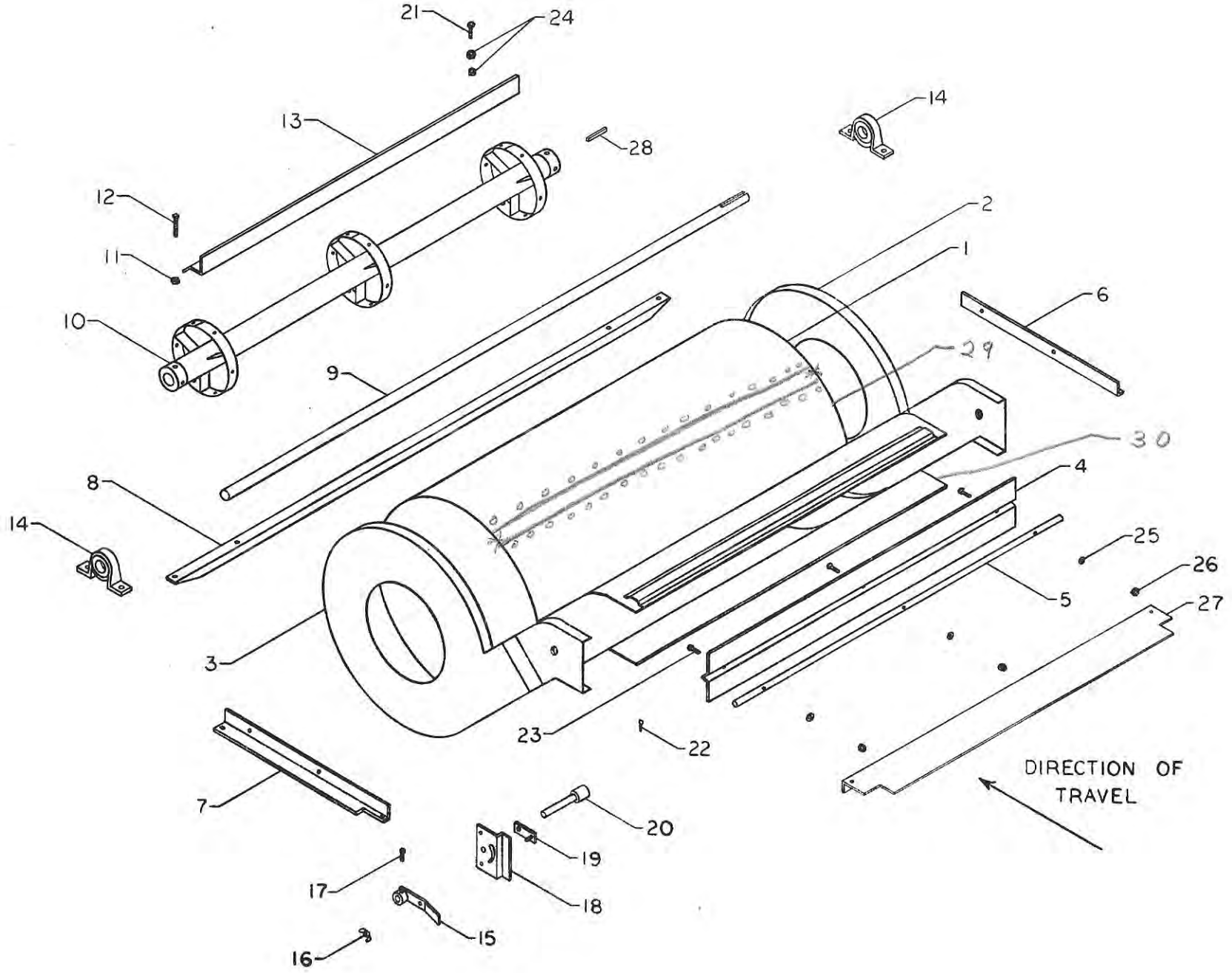
21
24
13
28
14
12
2
11
1
10
6
29
9
30
8
4
14
25
26
5
27
3
23
22
7
20
19
17
18
15
16
DIRECTION OF TRAVEL

No.	Part No.	Description	No. Req'd
1	~~12534~~ 120130	~~Housing, Center Section~~ FRONT HALF HOUSING SECTION	1
2	12530	Housing, End Section, Right	1
3	12531	Housing, End Section, Left	1
4	12532	Valve	1
5	6086	Shaft, Valve Control Rod	1
6	6087	Housing Mtg. Angle, Right	1
7	6088	Housing Mtg. Angle, Left	1
8	6089	Housing Mtg. Angle, Transverse	1
9	10110	Shaft, Cleaning Fan	1
10	5363	Rotor	1
11	--	Nut, 3/8" - 16 USS	4
12	--	Setscrew, 3/8" - 16 x 1", Square Head	4
13	120120	Blade, Cleaning Fan	6
14	3022	Bearing with collar, 1-3/16" Pillow Block	2
15	6111	Handle, Air Valve Adjusting	1
16	--	Nut, 1/4" - 20, Wing	1
17	--	Setscrew, 1/4" - 20 x 3/4", Square Head	1
18	12029	Quadrant, Air Valve Adjusting	1
19	6112	Lock, Air Valve Adjusting Handle	1
20	6092	Connector, Air Valve Control	1
21	--	Screw, 5/16" - 18 x 1", Cap	18
22	--	Pin, 1/8" x 1-1/4", Cotter	1
23	--	Screw, 1/4" x 1", USS Cap	3
24	--	Nut, 5/16" - 18 UNC	36
25	--	Lockwasher, 1/4"	3
26	--	Nut, 1/4", USS	3
27	12898	Lip, Center Section Housing	Optional
28	--	Keystock, 1/4 x 1/4 x 1-1/2	1
29	120128	top rear housing section	1
30	120129	Bottom rear housing section	1

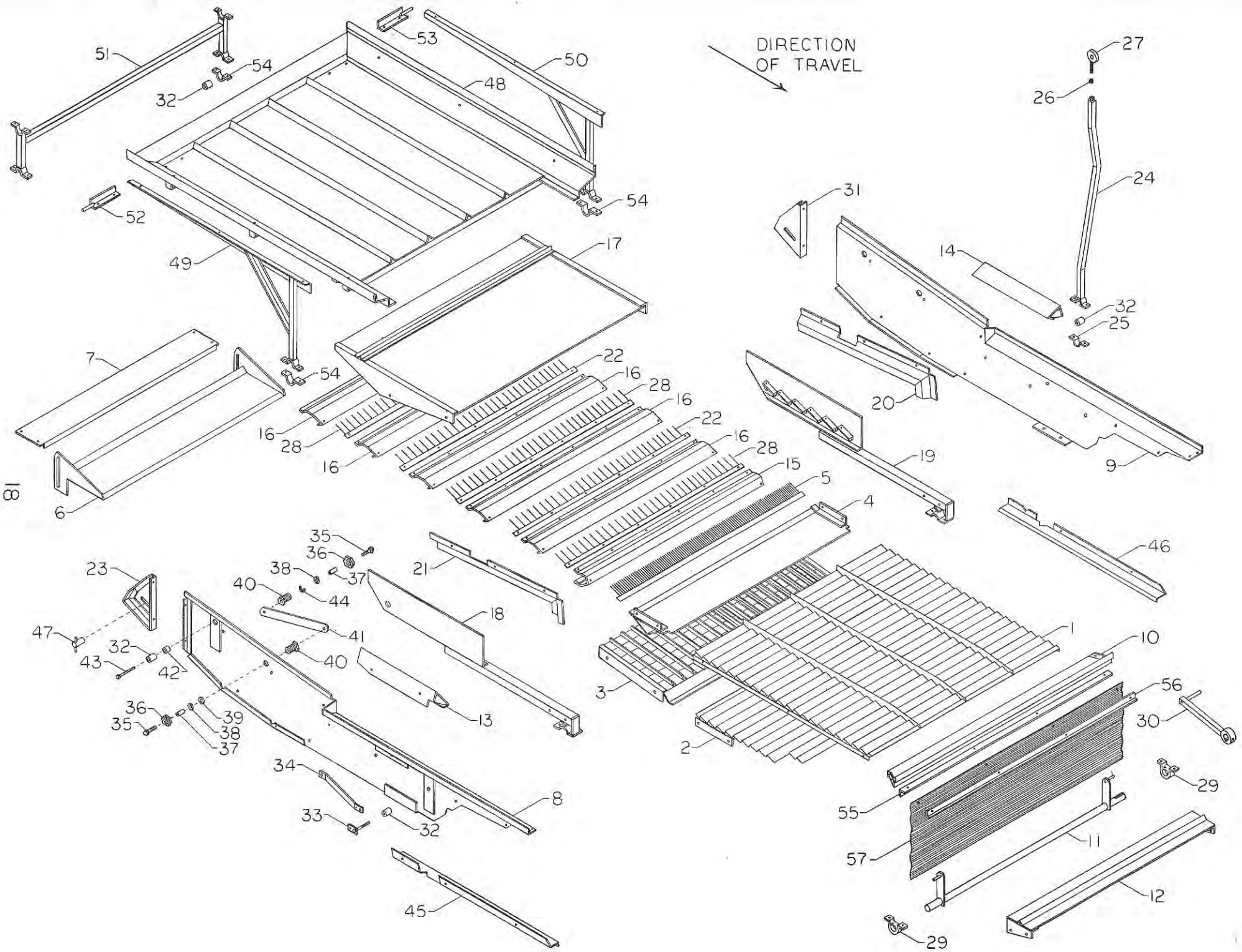
DIRECTION
OF TRAVEL
1
2
3
4
5
6
7
8
9
10
11
12
13
14
15
16
17
18
19
20
21
22
23
24
25
26
27
28
29
30
31
32
33
34
35
36
37
38
39
40
41
42
43
44
45
46
47
48
49
50
51
52
53
54
55
56
57

No.	Part No.	Description	No. Req'd
1	12612	Plate, Uncleaned Peanut Receiving	1
2	12613	Plate, Lower Air Channel	1
3	12614	Screen, Final Cleaning	1
4	12548	Plate, Chaff Accelerating	1
5	12852	Screening Finger Ass'y, No. 12 x 42-3/4"	1
6	12844	Tail Board, Adjusting Section	1
7	12845	Plate, Tail Board Bottom Section	1
8	12520	Side Frame Ass'y, Cleaning Tray, Right	1
9	12521	Side Frame Ass'y, Cleaning Tray, Left	1
10	12522	Frame Ass'y, Cleaning Tray, Front	1
11	10107	Shaft, Vibrating Screen Drive	1
12	12855	Plate, Cleaning Air Directing	1
13	12863	Trash Guard, Fixed, Right	1
14	12864	Trash Guard, Fixed, Left	1
15	12846	Plate, Air Direction Control, Front	1
16	12847	Plate, Air Lift Control	5
17	12862	Shield, Cleaning Air Interference	1
18	12850	Frame, Vibrating Screen, Right	1
19	12851	Frame, Vibrating Screen, Left	1
20	12842	Trash Guard, Vibrating Screen, Left	1
21	12843	Trash Guard, Vibrating Screen, Right	1
22	12848	Screening Finger Ass'y, Size 80, Odd	2
23	12853	Side Frame, Tail Board, Right	1
24	6076	Pitman, Vibrating Screen, Drive	1
25	6247	Cap, Rubber Bushing Retaining, with 5/16" hole	1
26	--	Nut, 5/8" - 18, SAE	1
27	3017	Bearing, 5/8" Rod End	1
28	12849	Screening Finger Ass'y, Size 80, Even	3
29	3056	Bearing, 1" Pillow Block	2
30	6069	Pitman Arm, Vibrating Screen, Drive	1
--	--	Keystock, 1/4 x 1/4 x 1-1/2	1
31	12854	Side Frame, Tail Board, Left	1
32	4044	Rubber Bushing	11
33	6173	Hanger Bolt Ass'y	2
34	6174	Brace, Hanger Bolt Ass'y, Arm	2
35	--	Screw, 1-1/2 x 1/4 - 20, Cap	4
36	--	Nut, 5/8", SAE Jam	4
37	4078	Nylon Bushing	4
38	--	Lockwasher, 5/8"	4
39	1029	Washer, 5/8" Flat	2
40	3061	Housing, Nylon Bushing	4
41	6114	Hanger, Vibrating Tray	2
42	1030	Spacer, 1/2" Bore x 1/2" Long	2
43	--	Screw, 3-1/2 x 1/2 - 20, Cap	2
44	1031	Washer, 5/8" Special	2
45	12871	Plate, Material Guide, Right	1
46	12872	Plate, Material Guide, Left	1
47	2083	Lock, Tail Board Adjustment	2
48	12504	Tray, Material Conveying, Rear	1
49	6049	Frame, Tray Support, Right	1
50	6050	Frame, Tray Support, Left	1
51	6304	Hanger, Material Conveying Tray, Rear	1
52	6051	Hanger, Material Conveying Tray, Right	1
53	6053	Hanger, Material Conveying Tray, Left	1
54	9418-C	Cap, Rubber Bushing Retaining	6
55	6433	Angle, Curtain Mounting	1
56	6195	Strip, Curtain Retaining	1
57	4189	Curtain	1

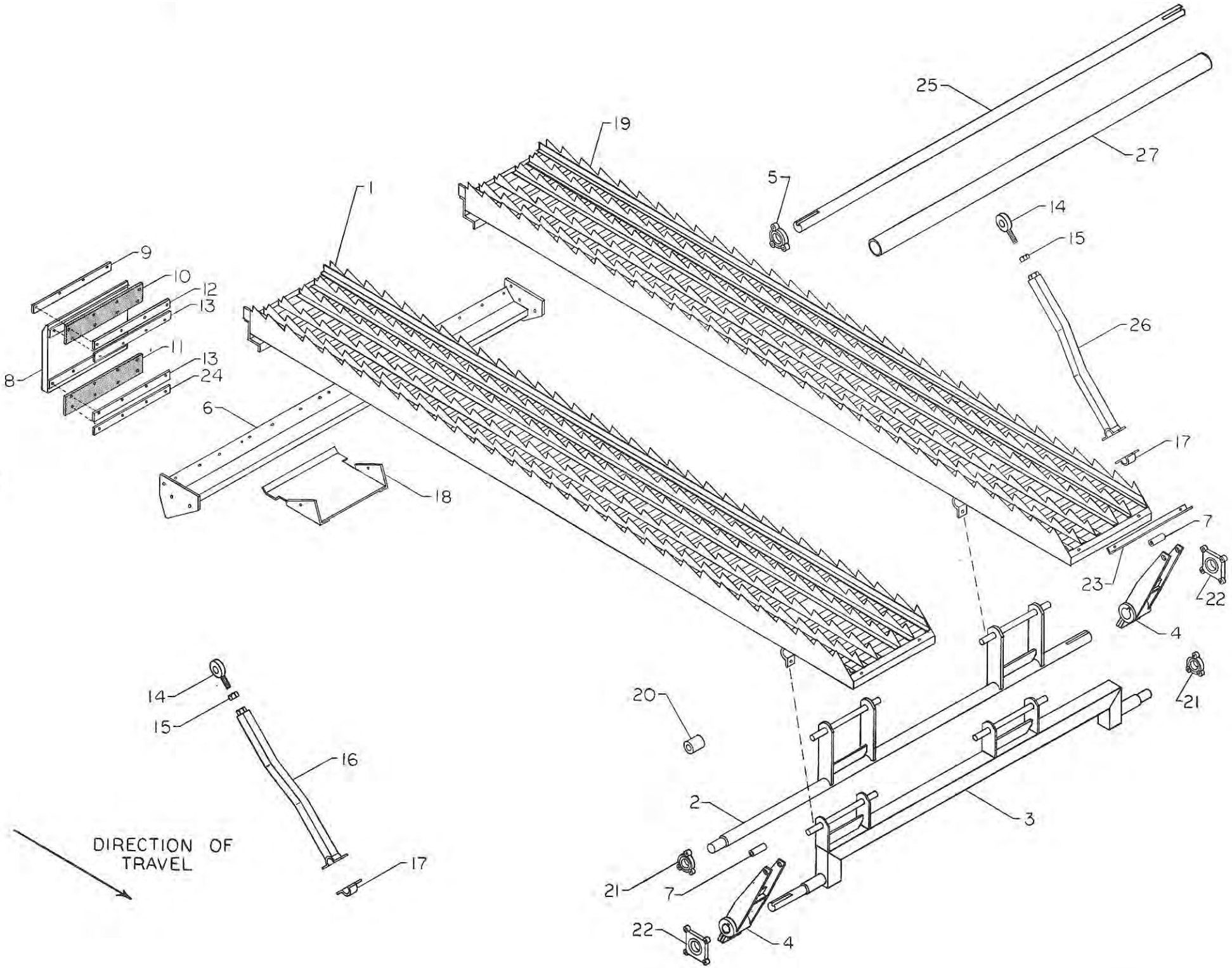

25
27
19
5
14
15
1
9
10
12
13
11
13
24
8
26
6
17
18
7
23
22
4
21
20
14
15
16
2
3
DIRECTION OF TRAVEL
17
21
7
22
4

STRAW RACK SECTION

No.	Part No.	Description	No. Req'd
1	12838	Straw Rack Ass'y, No. 2 & No. 4	2
2	10105	Shaft, Straw Rack Rock, Straight	1
3	10106	Shaft, Straw Rack Rock, Offset	1
4	6172	Pitman, Straw Rack Drive	2
-	--	Keystock, 3/8 x 3/8 x 2-1/2	2
5	3062	Bearing, 1-7/16", 3 Hole Flange	2
6	9669	Frame, Straw Rack Hanger	1
7	1032	Sleeve, Rubber Bushing Insert	2
8	120127	Plate, Straw Rack Hanger	4
9	6595	Top Rear Mtg. Flat	1 4
10	4265	Top Hinge Flap	1 4
11	4266	Lower Hinge Flap	1 4
12	6592	Top Inside Mtg. Flat	1 4
13	6593	Upper & Lower Inside Mtg. Flat	2 8
14	3017	Bearing, 5/8" Rod End	2
15	--	Nut, 5/8" - 18 SAE	2
16	6074	Pitman, Straw Rack Drive, Right	1
17	6247	Cap, Rubber Bushing Retaining, with 5/16" Hole	2
18	12841	Pan, Straw Rack Attachment, Rear	4
19	12839	Straw Rack Ass'y, No. 1 & No. 3	2
20	4044	Bushing, Rubber	8
21	3058	Bearing, 1-3/16", 3 Hole Flange	2
22	3020	Bearing, 1-11/16", 4 Hole Flange	2
23	6171	Bar, Straw Rack Attachment, Front	4
24	6594	Bottom Inside Mtg. Flat	1 4
25	10104	Shaft, Straw Rack Pitman Drive	1
26	6073	Pitman, Straw Rack Drive, Left	1
27	2082	Sleeve, Straw Rack Pitman Drive	1

Note: To distinguish the difference in where the straw racks are to be located, stand behind machine and count from left to right, this will give the correct positioning of the racks.

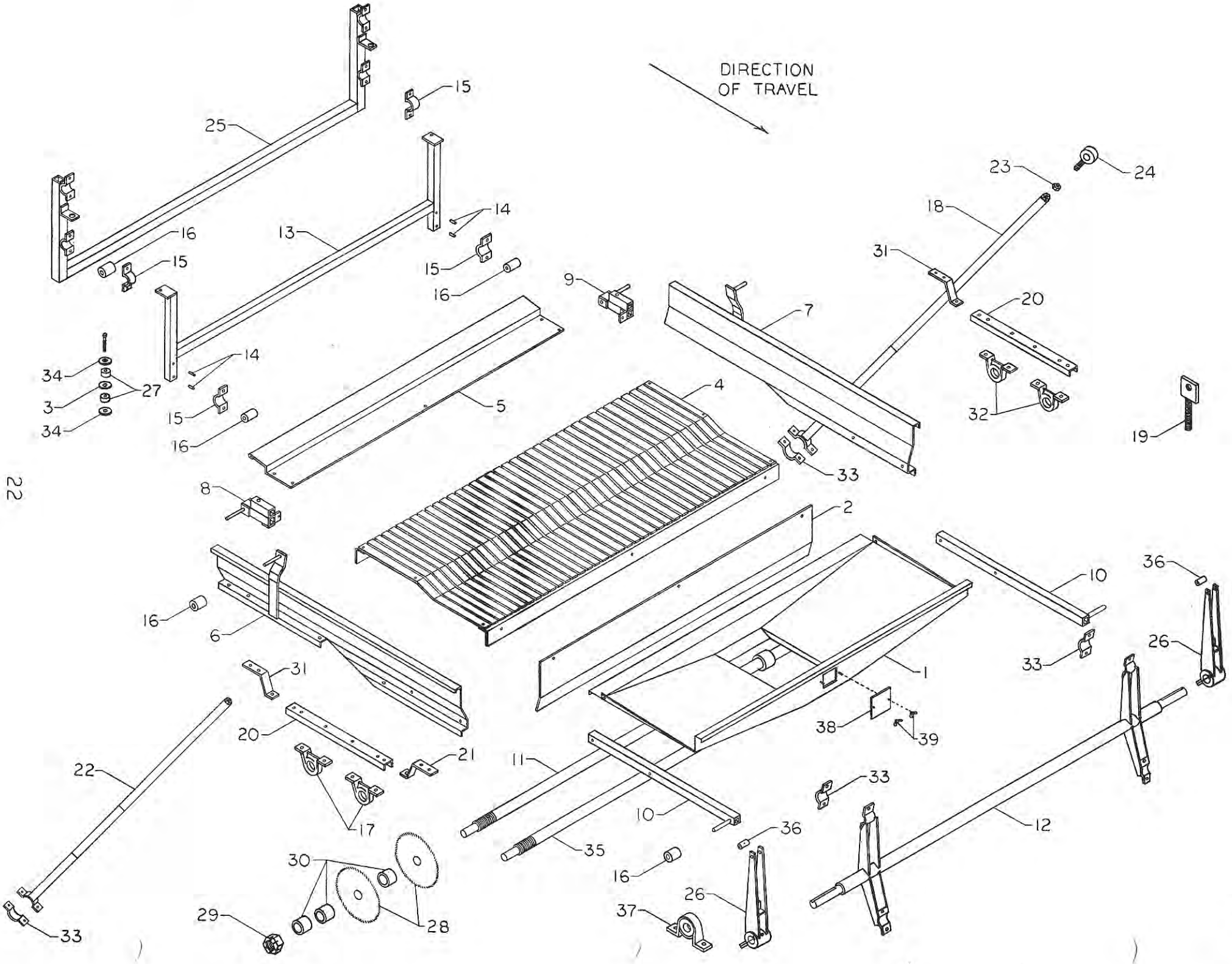
DIRECTION
OF TRAVEL
1
2
3
4
5
6
7
8
9
10
11
12
13
14
15
16
17
18
19
20
21
22
23
24
25
26
27
28
29
30
31
32
33
34
35
36
37
38
39

STEMMER SECTION

No.	Part No.	Description	No. Req'd
1	12861	Hopper, Stemmer Discharge	1
2	12860	Deflector	1
3	2052	Locator	2
4	12856	Stemmer Bottom	1
5	12857	Plate, Stemmer Attaching	1
6	12858	Side Frame, Stemmer, Right	1
7	12859	Side Frame, Stemmer, Left	1
8	6176	Bracket, Stemmer Hanger Mounting, Right	1
9	6177	Bracket, Stemmer Hanger Mounting, Left	1
10	6175	Bar Ass'y, Stemmer Hanger Mounting	2
11	10108	Shaft, Stemmer Saw, Rear	1
12	10044	Shaft and Hanger Ass'y	1
13	6071	Hanger Ass'y, Stemmer Box, Rear	1
14	6072	Spacer	4
15	9418-C	Cap, Rubber Bushing Retaining	8
16	4044	Bushing, Rubber	16
17	3016	Bearing, 7/8" Pillow Block	2
18	6180	Pitman, Cleaning Shoe Drive, Left	1
19	6196	Adjustment, Stemmer Saw	1
20	9502	Guide, Stemmer Saw	2
21	6179	Bracket, Stemmer Saw Mounting, Front	1
22	6184	Pitman, Cleaning Shoe Drive, Right	1
23	--	Nut, 5/8" SAE	2
24	3017	Bearing, 5/8" Rod End	2
25	6316	Hanger Ass'y, Cleaning Shoe, Rear	1
26	6048	Pitman Arm, Cleaning Shoe Drive	2
--	--	Keystock, 1/4 x 1/4 x 2-1/2	2
27	4076	Bushing, Stemmer Hanger Support	4
28	5150	Saw, 72 Tooth Stemmer	74
29	--	Nut, 1" SAE Castle	2
30	2076	Spacer, Stemmer Saw	78
31	6178	Bracket, Stemmer Saw Mounting, Rear	2
32	3008	Bearing with collar, 1" Pillow Block	2
33	6247	Cap, Rubber Bushing Retaining, with 5/16" Hole	6
34	2053	Retainer	4
35	10109	Shaft, Stemmer Saw, Front	1
36	1032	Sleeve, Rubber Bushing Insert	2
37	3022	Bearing, 1-3/16" Pillow Block	2
38	12942	Cover, Inspection	1
39	--	Nut, 1/4 - 20 x 3/4" Long Wing	2

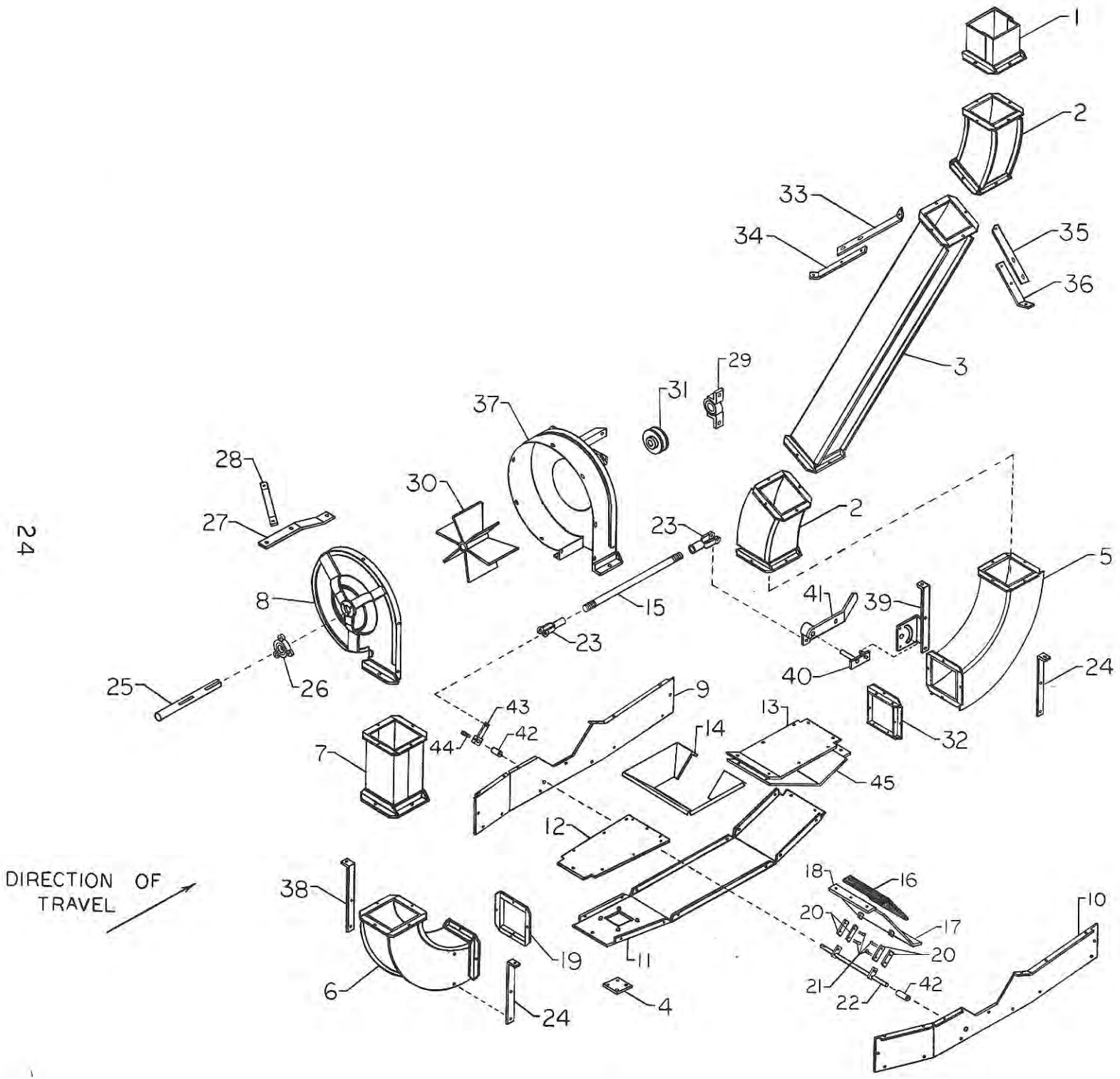
1
2
33
34
35
36
3
29
31
37
28
30
27
2
23
5
41
39
8
15
23
40
24
25
26
9
43
42
44
7
14
13
32
45
12
DIRECTION OF TRAVEL
38
18
16
20
17
20
10
19
11
21
22
42
6
24
4

PNEUMATIC CONVEYOR SECTION

No.	Part No.	Description	No. Req'd
1	12819	Nozzle, Conveyor Duct	1
2	12817	Conveyor Pipe, Curved Section	2
3	12818	Conveyor Pipe, Straight Section	1
4	12816	Plate, Inspection	1
5	12806	Conveyor Pipe with Cleanout Door	1
-	--	Chain, 3 Link Check	2
-	--	Cotter Pin, 3/16" x 2"	4
6	12805	Pipe, High Pressure Curved Section	1
7	12804	Pipe, High Pressure Blower Connecting	1
8	12802	Housing, Bearing Mounting Side	1
9	120123	Side Panel, Jet Tunnel, Left	1
10	120124	Side Panel, Jet Tunnel, Right	1
11	12815	Bottom Panel, Jet Tunnel	1
12	120126	Cover Plate, Jet Tunnel, High Pressure End	1
13	12810	Cover Plate, Jet Tunnel, Low Pressure End	1
14	120125	Hopper, Pneumatic Conveyor	1
15	6162	Rod, Air Volume Control	1
16	4263	Hinge Flap	1
17	120121	Valve, Check and Venturi Control	1
18	6591	Flap Tightener Strip	1
19	12570	Connector, High Pressure Pipe Connecting	1
20	6590	Adjusting Rod Extension	4
21	--	Cotter Pin, 1-1/2 x 3/16	4
22	6589	Adjustment Rod	1
23	2003	Clevis	2
--	2009	Pin, Clevis	2
--	--	Cotter Pin, 1-1/2" x 1/8"	2
24	6158	Bracket, Pneumatic Conveyor Supporting, Front	2
25	10100	Shaft, Blower Rotor	1
26	3057	Bearing with collar, 1", 3 Hole Flange	1
27	6156	Brace, Blower Mounting, Primary	1
28	6155	Brace, Blower Mounting, Secondary	1
29	3008	Bearing, 1" Pillow Block	1
30	12803	Rotor	1
--	--	Keystock, 1/4 x 1/4 x 3-1/2	1
31	~~5036~~ 5090	V-Sheave, ~~1B40~~ 1B48, with 1" Bore	1
32	6161	Connector, Jet Tunnel Outlet	1
33	12579	Duct Brace, Rearward, Upper Section	1
34	12578	Duct Brace, Rearward, Lower Section	1
35	~~12477~~ 12577	Duct Brace, Forward, Upper Section	1
36	12576	Duct Brace, Forward, Lower Section	1
37	12801	Housing and Attaching Frame Ass'y	1
38	6157	Bracket, High Pressure Pipe Mounting, Rear	1
39	6159	Quadrant and Bracket Ass'y	1
40	6181	Hinge Pin and Control Handle Lock Ass'y	1
41	6587	Handle, Jet Air Volume Control	1
--	--	Washer, 1/2" Flat	1
--		Cotter Pin, 2" x 3/16"	1
42	2134	Adjustment Rod Spacers	2
43	6588	Crank Arm, Adjustment Rod	1
44	--	Square Head Setscrew, 1/2 x 1/4 - 20	1
45	120122	Primary Jet Section Plate	1

Note: Direction of travel, only on this page, indicates direction of material flow.

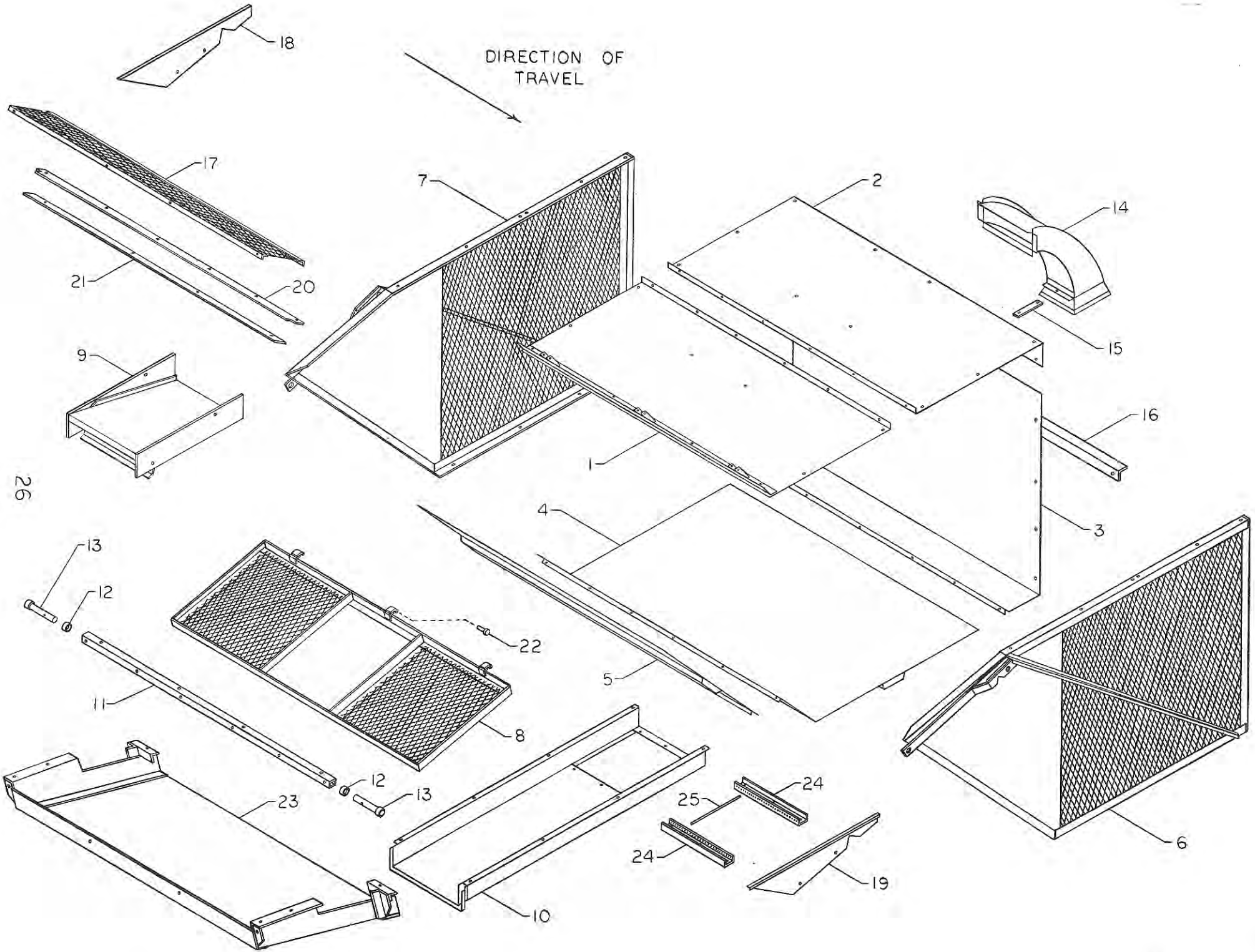
DIRECTION OF TRAVEL
1
2
3
4
5
6
7
8
9
10
11
12
13
14
15
16
17
18
19
20
21
22
23
24
25

BASKET SECTION

No.	Part No.	Description	No. Req'd
1	12538	Top, Lid Attaching Section	1
2	12539	Top, Duct Inlet Section	1
3	12537	Plate, Duct Inlet Side	1
4	12543	Plate, Bottom Housing Section	1
5	12540	Plate, Bottom Housing Discharge	1
6	12542	Side Ass'y, Front	1
7	12541	Side Ass'y, Rear	1
8	12544	Lid, Basket Dumping	1
9	120117	Duct, Spent Air Discharge	1
10	120118	Duct Ass'y	1
11	9509	Bar, Bin Hinge	1
12	9508-B	Spacer, Bin Hinge	2
13	9508	Shaft, Bin Hinge	2
14	12820	Pipe, Bin Inlet	1
15	6182	Brace	1
16	12555	Stiffener, Bin Housing	1
17	12884	Screen Ass'y, Dirt Removal	1
18	12551	End Section, Bin Lip, Right	1
19	12552	End Section, Bin Lip, Left	1
20	12545	Bottom Section, Bin Lip	1
21	12546	Stiffener, Basket Spout	1
22	1008	Pin, Hinge	3
23	12885	Sandtrap Ass'y	1
24	120119	Finger Mt'g Plate	2
25	2133	Screening Finger	38

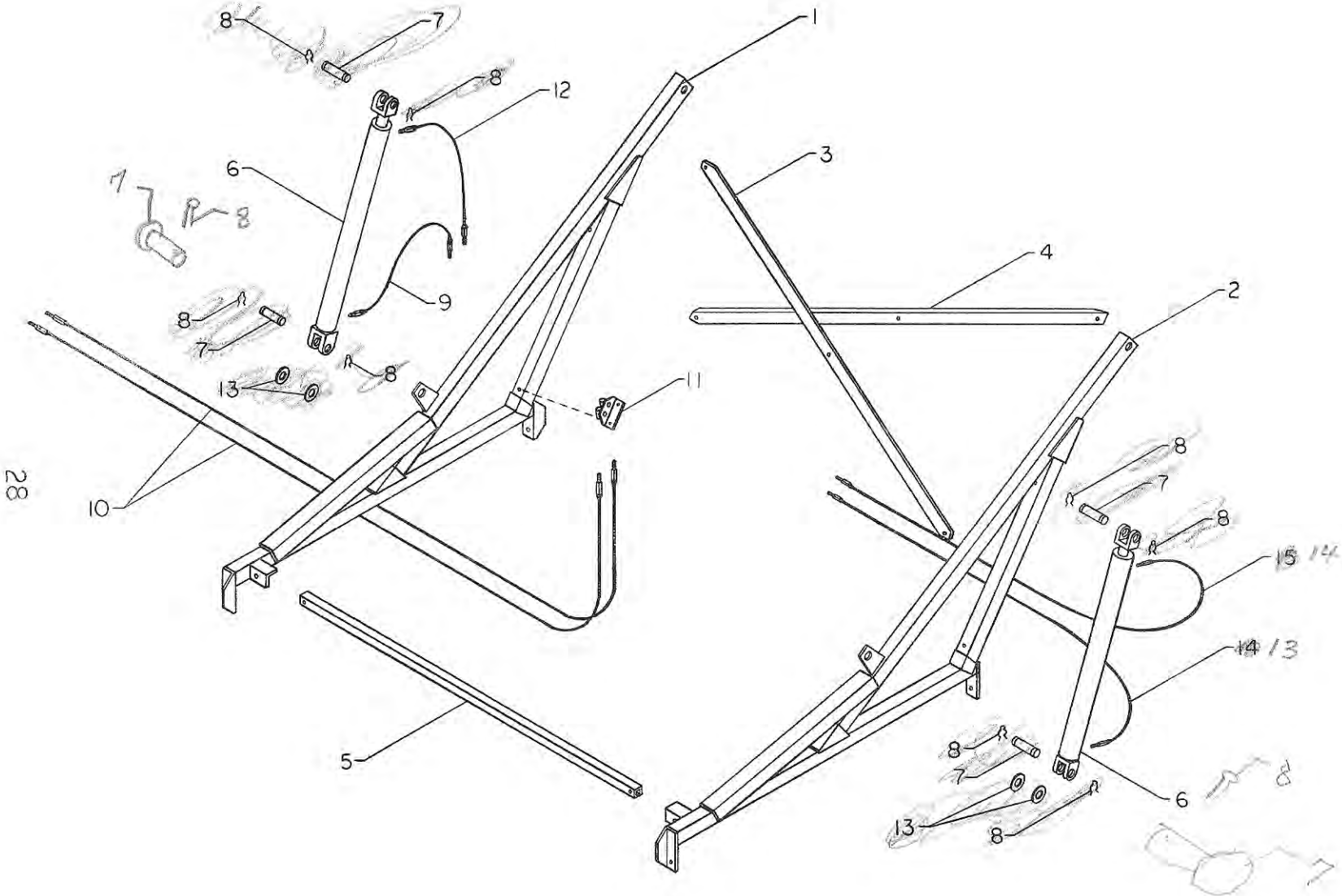
1
2
3
4
5
6
7
8
9
10
11
12
13
14
15

BASKET FRAME SECTION

No.	Part No.	Description	No. Req'd
1	9514	Side Frame Ass'y, Left	1
2	9507	Side Frame Ass'y, Right	1
3	9505	Brace, Flat Section	1
4	9506	Brace, Angle Section	1
5	9515	Bar, Bin Frame Connector	1
6	14000	Cylinder, Hydraulic	2
7	~~2039~~ 2126	Pin, Cylinder Att'g	4
8	~~2040~~ —	~~Clip, Pin Retaining~~ COTTER PIN (2 x 3/16 dia)	~~8~~ 4
9	14002	Hydraulic Hose, 1/4" x 24" long	1
10	14001	Hydraulic Hose, 3/8", 142" long	2
11	9510	Manifold, Hydraulic Oil Distribution	1
12	14003	Hydraulic Hose, 1/4", 30" long	1
~~13~~	~~2016~~	~~Washer, Hydraulic Spacer~~	~~4~~
~~14~~ 13	14005	Hydraulic Hose, 1/4", 92" long	1
~~15~~ 14	14004	Hydraulic Hose, 1/4", 104" long	1
--	2046	Adapter, 1/4" Swivel	2
--	2047	Adapter, 1/4" - 45° Swivel	2
--	2048	Bushing, 3/8" - 1/4" Reducing	4
--	2045	Adapter, 3/8" Swivel	2

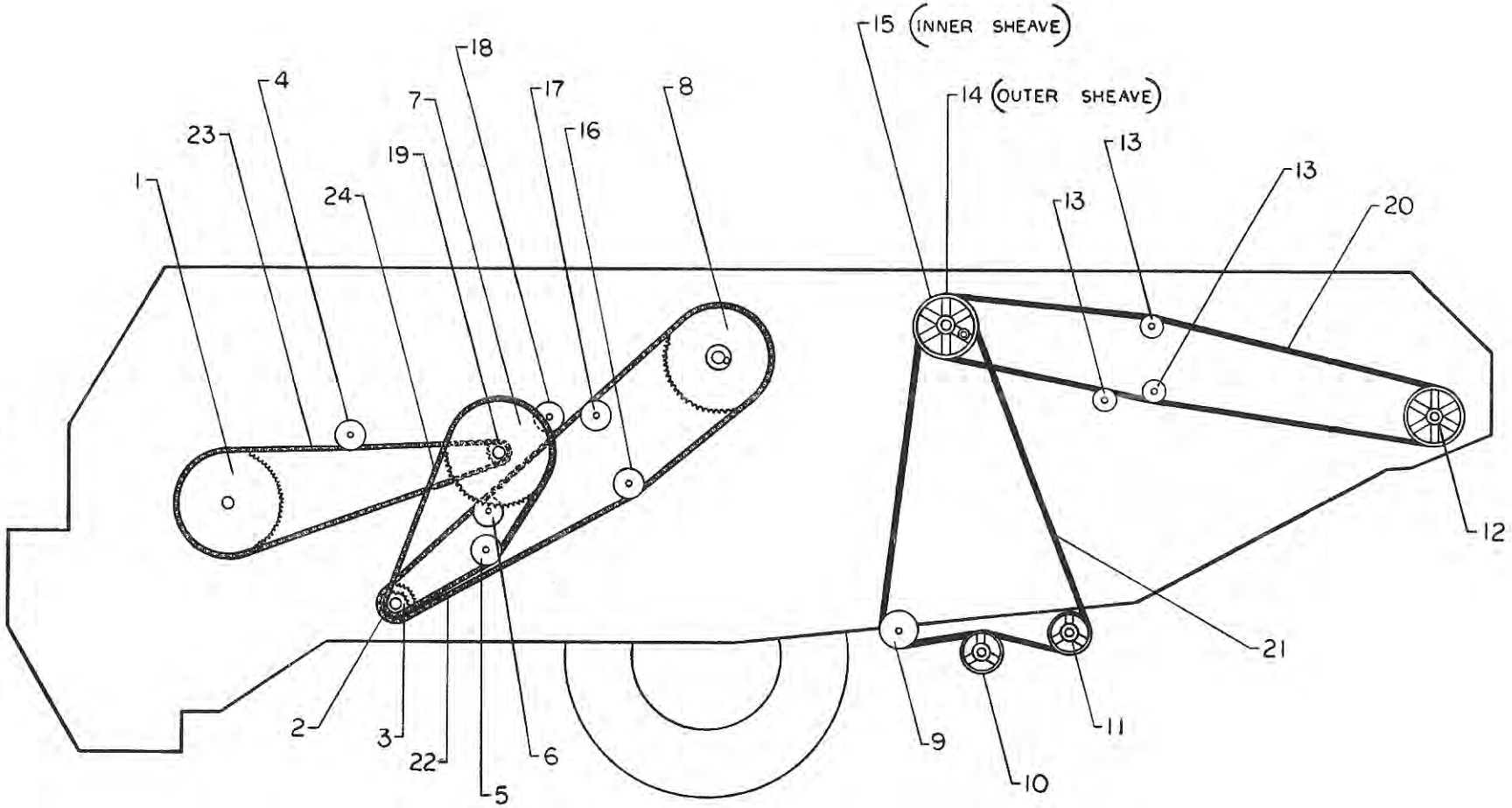
15 (INNER SHEAVE)
14 (OUTER SHEAVE)
18
4
7
17
8
23
16
13
19
13
13
1
24
20
12
21
2
3
22
6
5
9
10
11

DRIVE SECTION, LEFT SIDE

No.	Part No.	Description	No. Req'd
1	5113	Sprocket, 60B60, with 1-11/16" Bore	1
-	3020	Bearing with Collar, 1-11/16", 4 Hole Flange	1
-	--	Keystock, 3/8 x 3/8 x 1-3/4	1
2	5114	Sprocket, 60B26, with 1-11/16" Bore	1
-	3020	Bearing with Collar, 1-11/16", 4 Hole Flange.	1
3	5152	Sprocket, 60B19, with 1-11/16" Bore	1
-	--	Keystock, 3/8 x 3/8 x 3-1/2	1
4	5209	Idler, 4" Chain, with tire	1
-	2080	Spacer, 3/4" Idler	1
5	5209	Idler, 4" Chain, with tire	1
-	2035	Spacer, 2-1/4"	1
6	5209	Idler, 4" Chain, with tire	1
-	2031	Spacer, 3/8"	1
7	5113	Sprocket, 60B60, with 1-11/16" Bore	1
8	5119	Sprocket, 60B60, with 1-11/16" Bore w/Tapped Ecc. Hole	1
-	3024	Bearing with Collar, 1-11/16", 4 Hole Flange	1
-	--	Keystock, 3/8 x 3/8 x 1-3/4	1
9	5207	Idler, 4" V-Belt	1
-	2032	Spacer, 7/16"	1
10	5055	V-Sheave, 1B6.0, with 1" bore	1
--	3008	Bearing with Collar, 1" Pillow Block	1
--	--	Keystock, 1/4 x 1/4 x 1-1/2	1
11	5055	V-Sheave, 1B6.0, with 1" bore	1
--	3008	Bearing with Collar, 1" Pillow Block	1
--	--	Keystock, 1/4 x 1/4 x 1-1/2	1
12	5509	V-Sheave, 1B8.75, with 1" bore	1
--	3015	Bearing with Collar, 1" Two Hole Flange	2
13	5317	Idler, 3" Flat Belt (Vine Spreader, only)	3
14	5510	V-Sheave, 1B8.75, with 1-7/16" Bore with Eccentric	1
--	--	Keystock, 5/16 x 5/16 x 3	1
15	5507	V-Sheave, 1B7.8, with 1-7/16" bore	1
--	3062	Bearing, 1-7/16", 3 Hole Flange	1
16	5209	Idler, 4" Chain, with tire	1
--	2034	Spacer, 1"	1
17	5209	Idler, 4" Chain, with tire	1
--	2078	Spacer, 17/32"	1
18	5209	Idler, 4" Chain, with tire	1
--	2078	Spacer, 17/32"	1
19	5133	Sprocket, 60B16, with 1-11/16" bore	1
--	3024	Bearing with Collar, 1-11/16", 4 Hole Flange	1
--	--	Keystock, 3/8 x 3/8 x 3-1/2	1
20	4179	V-Belt, B158 (Vine Spreader Drive)	1
21	4184	V-Belt, BB128 (Stemmer Saw Drive)	1
22	4186	Chain, #60, 172 Pitches Long	1
23	4187	Chain, #60, 137 Pitches Long	1
24	4188	Chain, #60, 103 Pitches Long	1

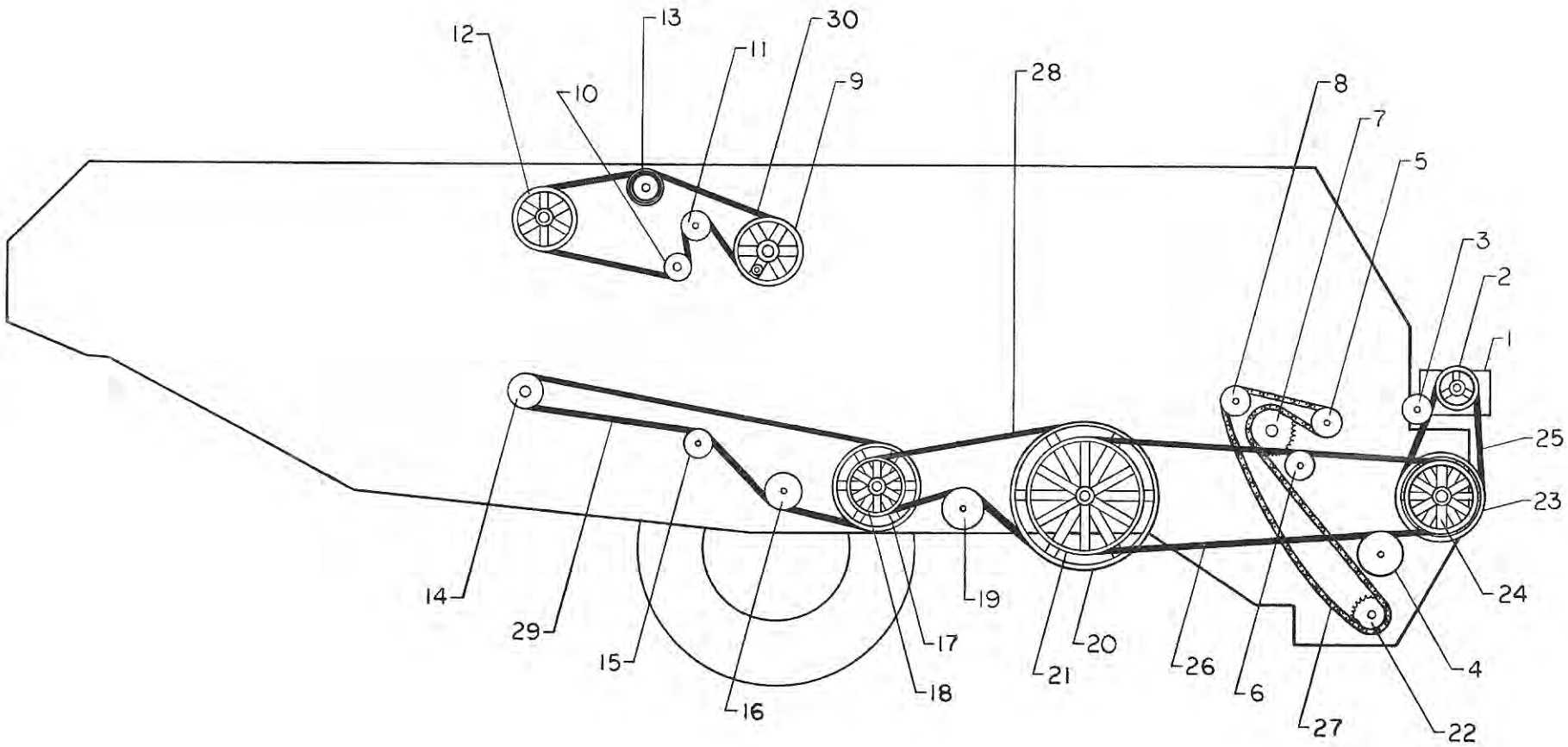
12
13
30
11
10
9
28
8
7
5
3
2
1
25
23
24
14
29
15
16
18
17
19
21
20
26
6
27
4
22

No.	Part No.	Description	No. Req'd
1	14050	Pump, Hydraulic (Optional)	1
2	5089	V-Sheave, 1B6.3, with 3/4" bore	1
3	5205	Belt Idler, 4" Single Flange Flat	1
4	5210	Belt Idler Ass'y, 2 Section Special Flat, with Spacer	1
5	5209	Idler, 4" Chain, with tire	1
-	2079	Spacer, 5/8"	1
6	5211	Belt Idler Ass'y, 2 Piece Special Flat	1
-	2077	Spacer, 1/2"	1
7	5151	Sprocket, 40B48, with 1-11/16" bore	1
-	3020	Bearing with Collar, 1-11/16", 4 Hole Flange	1
-	--	Keystock, 5/16 x 5/16 x 1-3/4	1
8	5209	Idler, 4" Chain, with tire	1
-	2079	Spacer, 5/8"	1
9	5142	V-Sheave, 2B9.75, with 1-11/16" Bore w/Eccentric	1
-	3024	Bearing with Collar, 1-11/16", 4 Hole Flange	1
-	--	Keystock, 3/8 x 3/8 x 1-1/2	1
10	5500	V-Sheave, 2B3.4 P.D., with 1" bore	1
--	3057	Bearing with Collar, 1", 3 Hole Flange	1
--	--	Keystock, 1/4 x 1/4 x 2-1/4	1
11	5211	Belt Idler Ass'y, 2 Piece Special Flat	1
12	5504	V-Sheave, 2B8.75, with 1-7/16" Bore w/Eccentric	1
--	3062	Bearing, 1-7/16", 3 Hole Flange	1
--	--	Keystock, 5/16 x 5/16 x 1-3/4	1
13	5501	V-Sheave, 2B5.1, with 1" bore	1
--	3057	Bearing with Collar, 1", 3 Hole Flange	1
--	--	Keystock, 1/4 x 1/4 x 2-1/4	1
14	5090	V-Sheave, 1B5.0, with 1" bore	1
--	3008	Bearing, 1" Pillow Block	1
--	--	Keystock, 1/4 x 1/4 x 1-1/2	1
15	5208	Idler, 6" Flat Belt	1
--	2031	Spacer, 3/8"	1
16	5207	Idler, 4" V-Belt	1
17	5004	V-Sheave, 1FB13.8	1
--	5025	Bushing, 1-3/16" FT	1
--	3022	Bearing with Collar, 1-3/16" Pillow Block	1
18	5508	V-Sheave, 1C8.0	1
--	5010	Bushing, 1-3/16" SDS	1
--	--	Keystock, 1/4 x 1/4 x 2-1/2	1
19	5208	Idler, 6" Flat Belt	1
20	5505	V-Sheave, 1C20.0	1
--	5506	Bushing, 1-11/16" QD	1
--	3020	Bearing with Collar, 1-11/16", 4 Hole Flange	1
--	--	Keystock, 3/8 x 3/8 x 5	1
21	5051	V-Sheave, 2C16.0, with 1-11/16" bore	1
22	5154	Sprocket, 40B32, with 1-3/16" bore	1
--	3018	Bearing, 1-3/16", 3 Hole Flange	1
--	--	Keystock, 1/4 x 1/4 x 1-1/2	1
23	5088	V-Sheave, 1B11.0	1
--	5060	Bushing, 1-11/16" SDS	1
--	3006	Bearing, 1-11/16", 4 Hole Flange	1
--	--	Keystock, 3/8 x 3/8 x 1-3/4	1
24	5050	V-Sheave, 2C10.0, with 1-11/16" bore	1
--	--	Keystock, 3/8 x 3/8 x 3	1
25	4185	V-Belt (Pump Drive)	1
26	4066	V-Belt, C144 (Main Drive)	2
27	4183	Chain, #40, Double Pitch 254 Pitch Length	1
28	4180	V-Belt, C112 (Cleaning Fan Drive)	1
29	4069	V-Belt, B136 (pneumatic Conveyor Drive)	1
30	4069	V-Belt, B136 (Straw Rack Drive)	2

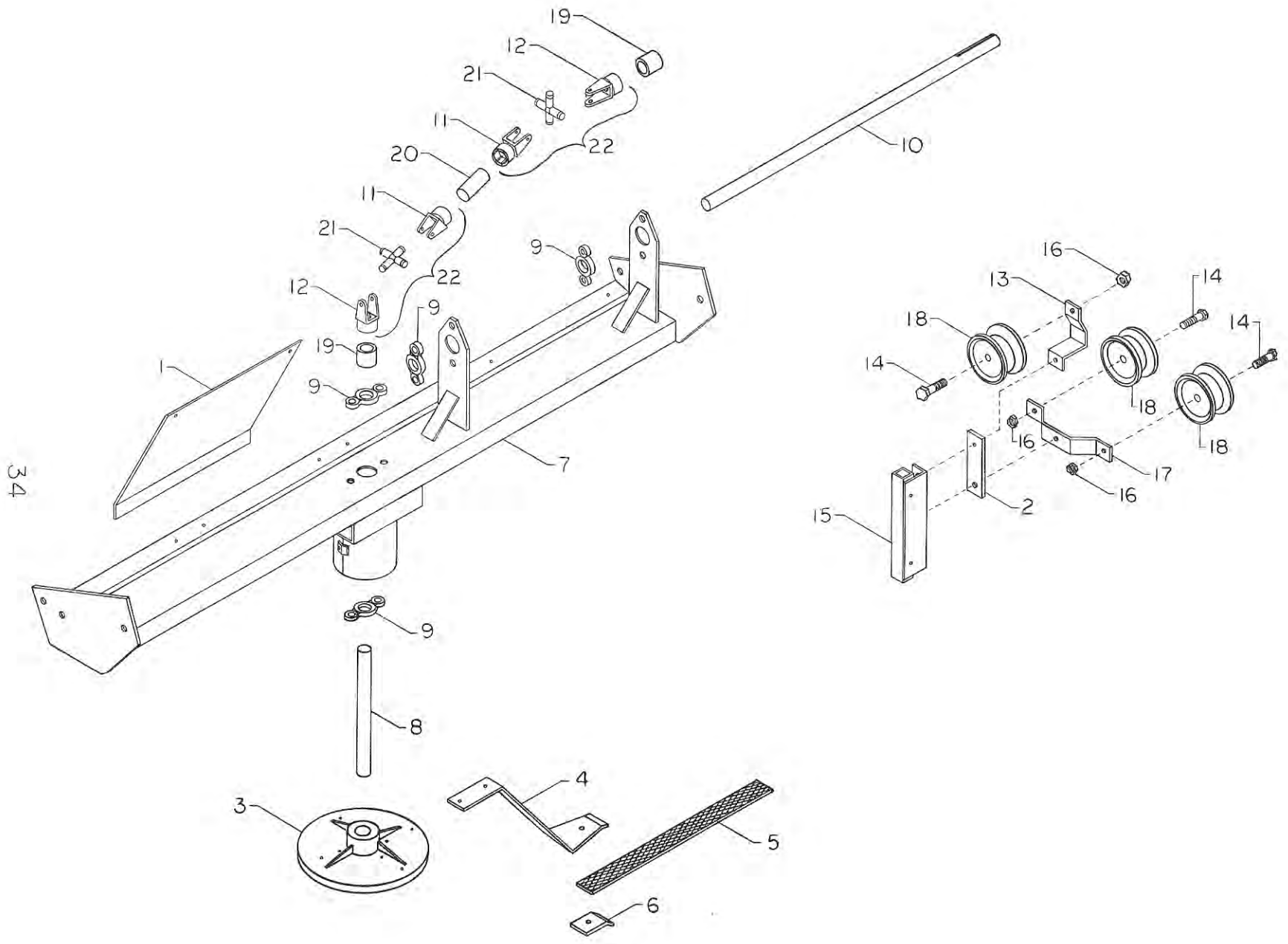
19
12
21
11
22
20
11
21
22
12
9
19
9
1
9
7
10
16
13
14
18
14
14
18
18
16
17
16
2
15
9
8
4
3
5
6

VINE SPREADER SECTION

No.	Part No.	Description	No. Req'd
1	12886	Shield	1
2	6189	Spacer	1
3	5326	Hub, Rotor	1
4	6257	Arm, Rotor	4
5	4074	Flail	4
6	6118	Clamp, Flail Retaining	4
7	9670	Frame Ass'y	1
8	10040	Shaft, Flail Rotor	1
9	3015	Bearing with Collar, 1" Two Hole Flange	4
10	10111	Driveshaft	1
11	11023A	Yoke, Universal Joint	2
12	11023B	Yoke, Universal Joint	2
13	6317	Bracket, Idler Mounting Fixed Section	1
14	--	Cap Screw, 3/8" - 16 x 1-1/4" USS	3
15	9146	Frame, Idler Mounting	1
16	--	Nut, 3/8" - 16 USS	3
17	9152	Bracket, Idler Mounting Adjustable Section	1
18	5317	Idler, 3" Flat Belt	3
19	2092	Bushing	2
20	10112	Shaft, Universal Joint Coupling	1
21	11005	Spider Journal	2
22	11023	Complete Universal Ass'y	2

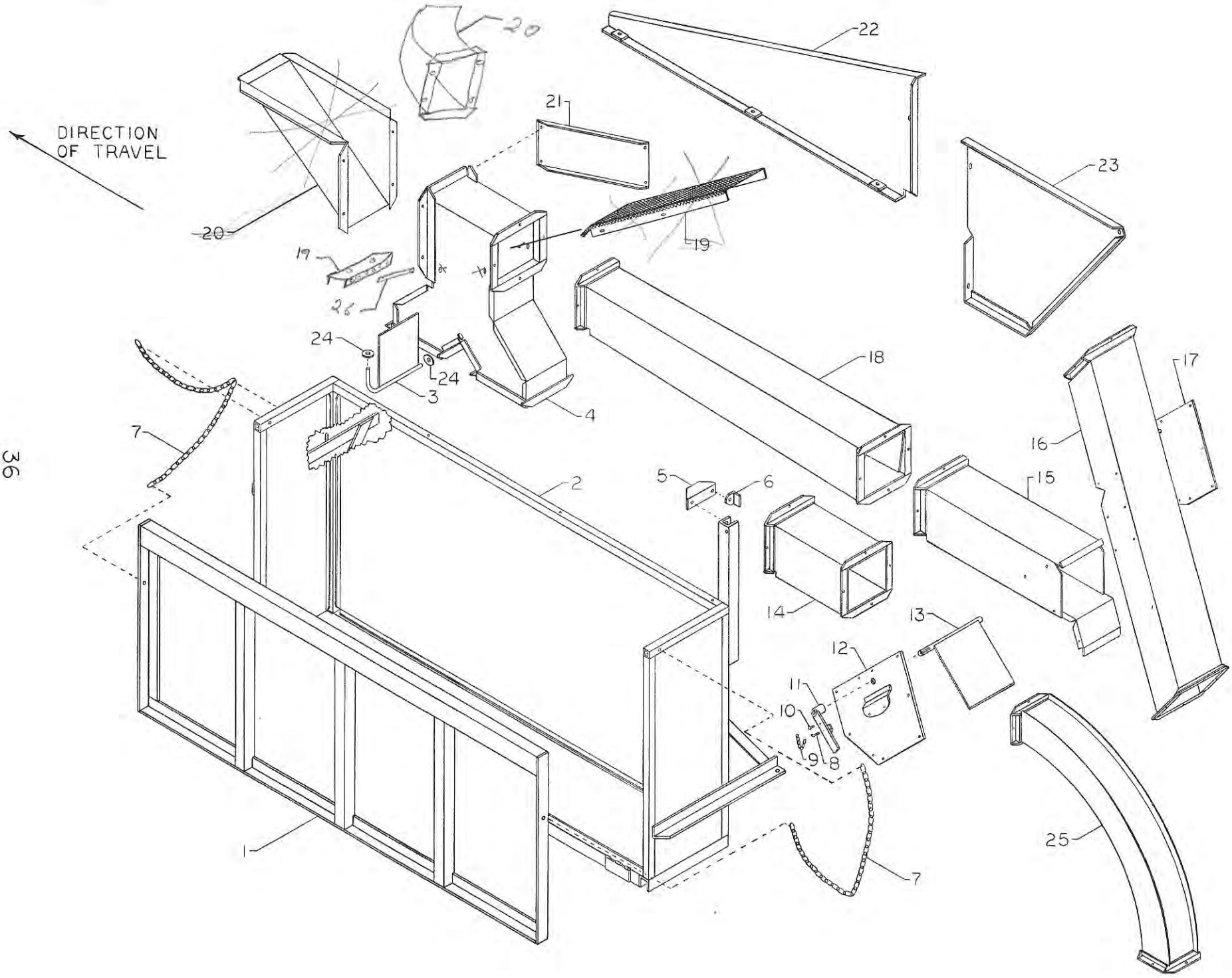
DIRECTION
OF TRAVEL
20
22
21
23
19
17
26
24
3
4
18
7
2
5
6
15
16
17
14
13
12
11
10
9
8
1
25
7

No.	Part No.	Description	No. Req'd
1	12934	Door, Bagging Stand	1
2	12935	Stand, Bagging	1
3	6468	Valve, Bag Filler	1
4	12912	Ass'y, Bag Filler	1
5	6475	Angle, Extension	1
6	6476	Angle, Mtg. (weld to side of combine)	1
7	4205	Chain, 3/16" Attaching; 36 links	2
8	--	Pin, Cotter; 1-1/4" long x 3/16"	1
9	--	Chain, Check; 7 link	1
10	--	Pin, Cotter; 5/8" long x 3/16"	1
11	6515	Handle, Adjusting	1
12	12916	Plate, Left Side Reinforcing	1
13	6466	Valve, Directional Flow	1
14	12941	Pipe, Extension Conveyor	1
15	12917	Pipe, Intersecting Conveyor	1
16	12918	Pipe, Bypass Conveyor	1
17	12915	Plate, Right Side Reinforcing	1
18	12913	Pipe, Tapered Conveyor	1
19	~~12914~~ 120131	~~Screen, Trash Separation~~ finger mtg plate	2
20	~~120010~~ 12919	Pipe, Discharge CONVEYOR	1
21	12938	Mount, Hopper	1
22	120009	Shield, Left Front Chain	1
23	12937	Shield, Left Rear Chain	1
24	--	Washer, 1/2" Flat	2
25	12939	Pipe, Large Curved Conveyor	1
26	2136	screening finger	16

Note: When a basket and a bagger attachment are installed on the same machine do not use part numbers 25 and 14. When only a bagger attachment is used it is not necessary to use parts 8 - 13 and 15 - 17.

NUMERICAL PARTS INDEX

Part No.	Page	Part No.	Page	Part No.	Page	Part No.	Page	Part No.	Page
1008	27	3022	17,23,33	5210	33	6156	25	6476	37
1009	3	3023	9	5211	33	6157	25	6479	13
1011	5	3024	13,31,33	5317	31,35	6158	25	6515	37
1013	5	3025	5	5326	35	6159	25	6587	25
1029	19	3029	13	5327	13	6161	25	6588	25
1030	19	3056	19	5329	13	6162	25	6589	25
1031	19	3057	13,25,33	5363	17	6165	15	6590	25
1032	21,23	3058	21	5500	33	6165B	15	6591	25
2003	25	3059	5	5501	33	6166	15	6592	21
2009	25	3061	19	5504	33	6167	15	6593	21
2015	15	3062	21,31,33	5505	33	6168	15	6594	21
2016	29	4044	19,21,23	5506	33	6169	11	6595	21
2020	5	4066	33	5507	31	6170	11	7003	11
2031	31,33	4069	33	5508	33	6171	21	7008	11,13,15
2032	31	4074	35	5509	31	6172	21	7012	5
2034	31	4076	15,23	5510	31	6173	19	7013	15
2035	31	4078	19	6047	11,13,15	6174	19	7014	3
2037	15	4179	31	6048	23	6175	23	7018	15
2038	15	4180	33	6049	19	6176	23	7019	5,15
2039	29	4183	33	6050	19	6177	23	7024	9
2040	29	4184	31	6051	19	6178	23	7028	3
2041	15	4185	33	6053	19	6179	23	8012	7
2042	15	4186	31	6054	9	6180	23	8013	7
2045	29	4187	31	6055	5	6181	25	8014	7
2046	29	4188	31	6063	5	6182	27	8015	7
2047	29	4189	19	6064	5	6184	23	8016	7
2048	29	4205	37	6069	19	6189	35	8017	7
2050	5	4263	25	6071	23	6195	19	8018	7
2052	23	4264	15	6072	23	6196	23	8019	7
2053	23	4265	21	6073	21	6198	9	8021	5
2076	23	4266	21	6076	19	6221	5	8022	5
2077	33	5004	33	6078	15	6247	19,21,23	8023	5
2078	31	5025	33	6080	15	6257	35	8039	7
2079	33	5050	33	6081	15	6258	3	8040	7
2080	31	5051	33	6082	15	6259	3	9146	35
		5055	31	6083	15	6260	9	9152	35
2082	21	5060	33	6084	15	6261	5	9346	5
2083	19	5088	33	6086	17	6262	5	9347	5
2092	35	5089	33	6087	17	6300	3	9348	5
2095	13	5090	25,33	6088	18	6301	3	9349	5
2133	27	5113	31	6089	17	6302	3	9350	5
2134	25	5114	31	6092	17	6303	3	9351	5
3006	5,33	5119	31	6094	15	6304	19	9352	5
3008	23,25,	5133	31	6095	13	6308	5	9353	5
	31,33	5142	33	6097	13	6310	5	9355	35
3010	3	5150	23	6099	3	6312	5	9418C	19,23
3015	31,35	5151	33	6111	17	6315	5	9501	5
3016	23	5152	31	6112	17	6316	23	9502	23
3017	19,21,	5153	11	6114	19	6317	35	9505	29
	23	5154	33	6118	35	6433	19	9506	29
3018	3,33	5207	31,33	6134	9	6466	37	9507	29
3020	5,31,	5208	33	6135	5	6468	37	9508	27
	33,21	5209	31,33	6155	25	6475	37	9508B	27

Part No.	Page	Part No.	Page	Part No.	Page	Part No.	Page	Part No.	Page
9509	27	12531	17	12833	11	12890	9		
9510	29	12532	17	12834	11	12891	9		
9511	15	~~12534~~	~~17~~	12835	11	12892	9		
9512	15	12537	27	12836	11	12893	9		
9513	5	12538	27	12837	13	12894	9		
9514	29	12539	27	12838	21	12895	9		
9515	29	12540	27	12839	21	12896	9		
9516	15	12541	27	12841	21	12897	9		
9517AA	5	12542	27	12842	19	12912	37		
9523	5	12543	27	12843	19	12913	37		
9524	5	12544	27	12844	19	~~12914~~	~~37~~		
9525	15	12545	27	12845	19	12915	37		
9526	5	12546	27	12846	19	12916	37		
9527	3	12548	19	12847	19	12917	37		
9528	3	12551	27	12848	19	12918	37		
9530	5	12552	27	12849	19	12934 12919	37 37		
9531	5	12555	27	12850	19	12935	37		
~~9532~~	~~5~~	12570	25	12851	19	12937	37		
9669	21	12576	25	12852	19	12938	37		
9670	35	12577	25	12853	19	12941	37		
10040	35	12578	25	12854	19	12942	23		
10044	23	12579	25	12855	19	14000	29		
10047	13	12586	9	12856	23	14001	29		
10050	3	12589	9	12857	23	14002	29		
10051	9	12590	9	12858	23	14003	29		
10058	5	12610	3	12859	23	14004	29		
10100	25	12611	3	12860	23	14005	29		
10101	13	12612	19	12861	23	14006	15		
10102	11	12613	19	12862	19	14050	33		
10103	13	12614	19	12863	19	120008	13		
10104	21	12801	25	12864	19	120009	37		
10105	21	12802	25	12865	9	~~120010~~	~~37~~		
10106	21	12803	25	12866	9	120117	27		
10107	19	12804	25	12867	9	120118	27		
10108	23	12805	25	12868	9	120119	27		
10109	23	12806	25	12869	9	120120	17		
10110	17	12810	25	12870	9	120121	25		
10111	35	12815	25	12871	19	120122	25		
10112	35	12816	25	12872	19	120123	25		
10123	13	12817	25	12873	9	120124	25		
11012	5	12818	25	12874	9	120125	25		
11021	5	12819	25	12875	9	120126	25		
11022	5	12820	27	12876	9	120127	21		
11023	35	12822	15	12877	9	120128	17		
11023B	35	12823	15	12878	9	120129	17		
11050	5	12824	15	12880	9	120130	17		
12029	17	12825	15	12881	9	120131	37		
12503	9	12826	15	12883	9				
12504	19	12827	15	12884	27				
12514	9	12828	15	12885	27				
12520	19	12829	15	12886	35				
12521	19	12830	15	12887	3				
12522	19	12831	15	12888	3				
12530	17	12832	11	12889	9				

WARRANTY

Hobbs Engineering Company warrants that each machine manufactured by it and sold under the HOBBS trademark shall be free from defects in material and workmanship. The Company's sole obligation under this warranty shall be limited to making good, F. O. B. Company factory, any part of its product which under normal and proper use and maintenance proves defective in material and workmanship within six months after delivery to the Buyer provided that notice of such defect and satisfactory proof thereof is promptly given by the Buyer through his Dealer to the Company, and thereafter such part is returned to the Company, with transportation charges prepaid, and Company's examination proves such part to have been defective.

This warranty does not apply in respect to damage to any product or accessory or attachment thereof caused by overloading or other misuse, neglect or accident nor does this warranty apply to any product, or accessory or attachment thereof which shall have been repaired or altered by other than the Company or its authorized dealer in any way, which, in the sole judgment of the Company affects the performance, stability or purpose for which it was manufactured.

With respect to tires, engines, or other trade accessories, the Company makes no warranty whatsover and the buyer shall rely solely upon the existing warranties, if any, of the respective manufacturers thereof.

IMPROVEMENTS

Hobbs Engineering Company is constantly striving to improve its machines. Changes in design and improvement will be made whenever the manufacturer believes the efficiency of the machines will be improved thereby, but without incurring any obligation to incorporate such improvements in any machines which have been shipped or are in service.