CLC-18, CLC-19

CROP LIFTER/CONDITIONER

CAT272 1st EDITION

Beginning Serial # 420475

Owner's Name _____

Dealer's Name _____

Serial Number _____ Model No. _____

Date Purchased _____

TABLE OF CONTENTS

CAT272
1st Edition
October 1, 2004

Model CLC-18, CLC-19
Crop Lifter / Conditioner
(Beginning Serial # 420475)

Section		Page
1	Peanut Lifter Conditioner	3
2	18' Lifter/Conditioner Pick-up	5
3	19' Lifter/Conditioner Pick-up	7
4	Center Bearing Shield	9
5	Gauge Wheel Assembly	11
6	Numerial Parts Index	12
	Warranty	

NOTES

The Terms "Left" and "Right" used in the description of parts are determined by facing the direction of travel of the machine.
"A/R" found in the "No. Req'd" column denotes "As Required".
"OPT" found in the "No. Req'd" column denotes "Optional".

1100 Holland Road Suffolk, VA 23434 U.S.A.
(757) 539-0231 / Fax - (757) 934-3264

1701 S. Slappey Blvd. Albany, GA 31701
(229) 439-2217 / Fax (229) 439-9343

AMADAS

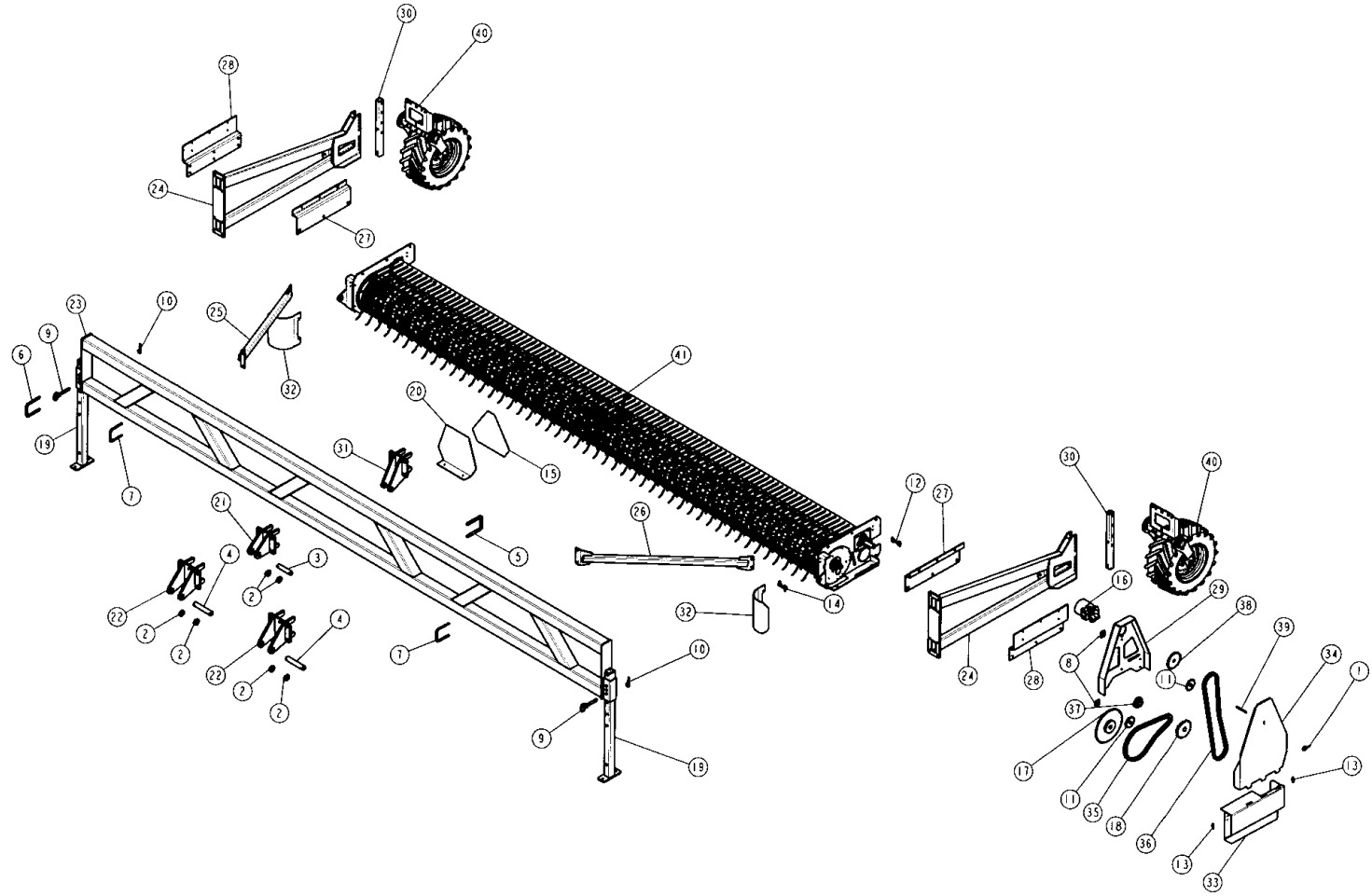
30
40
28
24
27
23
10
25
9
6
32
41
20
19
31
15
7
21
26
12
27
30
40
5
4
3
2
22
2
2
4
22
2
2
7
32
14
16
29
38
39
34
1
10
24
28
8
11
37
9
19
17
11
35
18
36
13
13
33

ITEM	PART NUMBER	DESCRIPTION	QTY SHOWN	QTY REQ'D	COMMENTS
1	1400	PIN, LYNCH, 1/4" STANDARD	1		
2	1465	PIN, LYNCH; 7/16 X 2 HD	6		
3	1814	PIN, UPPER HITCH	1		
4	1815	PIN, LOWER HITCH	2		
5	1836	U-BOLT, 3/4-10 X 6 LG X 4-1/16 W	1	8	
6	1837	U-BOLT, 5/8-11 X 5-1/2 LG X 4-1/16 W	1	8	
7	1838	U-BOLT, 1/2-13 X 5 LG X 4-1/16 W	2		
8	2020	NUT, 5/8-11,2X1-3/4 IDLER ADJ	2		
9	2056	PIN, HITCH; 3/4 DIA. X 4-3/4 LONG	2		
10	2196	PIN, PLATED HAIR COTTER; 3-9/16 X .178	2		
11	5122	IDLER, NO.60 CHAIN SPROCKET	2		
12	7022	HOOK, SPRING LOADED	1		
13	7023	CATCH,HOOK	2		
14	7024	HOOK, SPRING LOADED; 90 DEGREE	1		
15	8519	DECAL, SLOW MOVING VEHICLE	1		
16	15936	MOTOR, HYD 9.9/CU.IN BI-ROTATION	1		
17	51051	SPROCKET, 60B48 FI-3/16	1		
18	51079	SPROCKET, 60B24 FI-7/16; 2 SETSCREWS	1		
19	93608	LEG, SUPPORT	2		
20	93813	MOUNT, SMV DECAL	1		
21	94049	LUG, TOP	1		
22	94056	LUG, LOWER	2		
23	94058	FRAME, CLC LIFTING	1		
24	94064	FRAME, GAUGE WHEEL MOUNTING	2		
25	94066	TRUSS, RIGHT GAUGE WHEEL	1		
26	94067	TRUSS, LEFT GAUGE WHEEL	1		
27	94069	PLATE, INNER MOUNTING	2		
28	94070	PLATE, OUTER MOUNTING	2		
29	94071	MOUNT, MOTOR	1		
30	94096	TUBING, MOUNTING	2		
31	94242	LUG, TOP; CAT II	1	OPT.	
32	127371	SHIELD, RATCHET JACK	2		
33	127777	SHIELD, LOWER PICK-UP	1		
34	127778	SHIELD, UPPER PICK-UP	1		
35	4043D-69	CHAIN, NO.60 ROLLER, 67 PITCHES+CONN.+OFFSET	1		
36	4043D-104	CHAIN, NO.60 ROLLER, 101 PITCHES + CONNECTOR + 2 OFFSETS	1		
37	60B13-1-7	SPROCKET, 60B13-1-7	1		
38	60B23-1	SPROCKET, 60B23 FI	1		
39	G100030	BOLT, HANGER 3/8-16 X 4-1/4	1		
40	S94063	ASSEMBLY, GAUGE WHEEL	2		
41	S94089	ASSY., PEANUT LIFTER CONDITIONER PICK-UP FRAME	1		CLC-19; S94050 ASSEMBLY, PICK-UP

NOTE:
PARTS SHOWN ARE FOR CLC-18.
SAME PARTS ARE USED FOR CLC-19 UNLESS OTHERWISE NOTED.

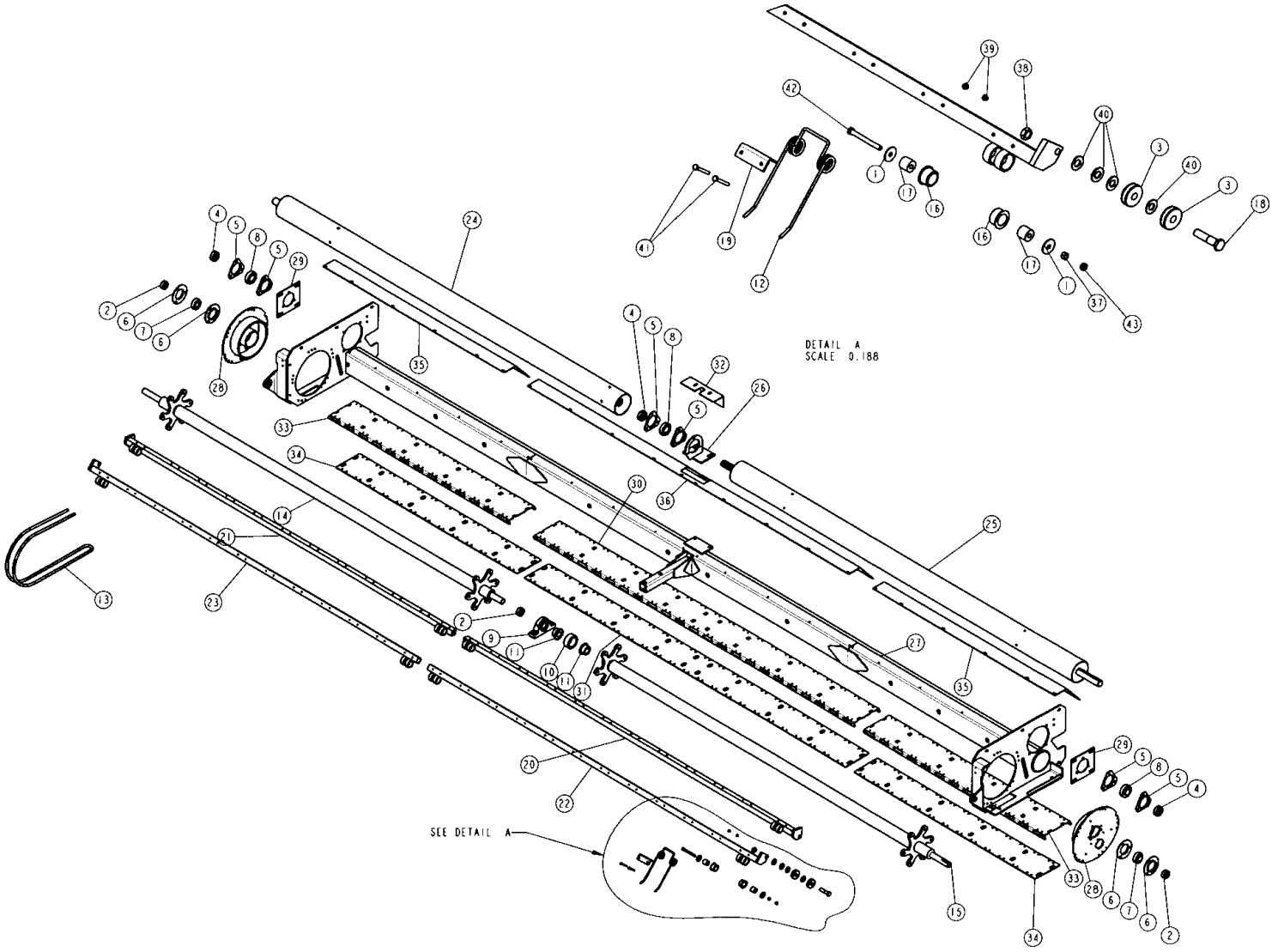
DETAIL A
SCALE 0.188
SEE DETAIL A

18' PEANUT LIFTER CONDITIONER PICK-UP

ITEM	PART NUMBER	DESCRIPTION	QTY SHOWN	QTY REQ'D	COMMENTS
1	1641	WASHER, 1-3/8 X 13/32 X 14GA.	2	48	
2	3005	COLLAR, 1.3/16 ECC. LOCKING	3		
3	3010	BEARING, 5/8 CAM FOLLOWER RADIAL	2	24	
4	3080	COLLAR, 1-7/16 ECCENTRIC LOCKING	3		
5	3091	FLANGETTE, 72MS FOR 1-3/8 & 1-7/16 BEARING	6		
6	3093	FLANGETTE, 62MS FOR 1.3/16 BEARING	4		
7	3096	INSERT, 1.3/16 REPLACEMENT BEARING	2		
8	3098	INSERT, 1-7/16 REPLACEMENT BEARING W/COLLAR	3		
9	3171	BEARING, 1.3/16 PILLOW BLOCK	1		
10	4480	CHAIN, COUPLING ROLLER	1		
11	5730	COUPLING, C4016 X 2/1.3/16	2		
12	7079	SPRING, TORSION BENT; LONG	1	144	
13	7081	BAND, PICK-UP; 1/2" ROUND	1	49	
14	10925	ROTOR,RIGHT 18' PICKUP	1		
15	10926	ROTOR,LEFT 18' PICKUP	1		
16	20178	BUSHING, POLY. (STRIP./HEADER); 7/8 LONG	2	48	
17	20179	BUSHING, 1.063 OD X .406 ID X .948 AST	2	48	
18	20571	SCREW, 5/8-18 X 2-1/2; 1/4 HEAD	1	12	
19	61710	PLATE, SPRING RETAINER	1	144	
20	61921	BAR, 18' LEFT PICKUP	1		
21	61922	BAR, 18' RIGHT PICKUP	1		
22	61923	BAR, 18' LEFT PICKUP	1		
23	61924	BAR, 18' RIGHT PICKUP	1		
24	61925	ROLLER, VINE	1		
25	61926	ROLLER, VINE	1		
26	93576	MOUNT, CENTER BEARING	1		
27	94089	FRAME, 18' CLC	1		
28	94100	CAM, ROUND PICKUP	2		
29	127045	MOUNT, 3-HOLE FLANGE BEARING	2		
30	127122	PLATE, HEADER BAND MOUNTING	1		
31	127438	PLATE, HEADER BAND MOUNTING	1		
32	127776	SHIELD, CENTER BEARING	1		
33	127787	PLATE, HEADER BAND MOUNTING	2		
34	127788	PLATE, HEADER BAND MOUNTING	2		
35	127790	SLIDE, END ROLLER	2		
36	127851	SLIDE, CENTER ROLLER	1		
37	G120377	NUT, 3/8-16 USS; GRADE 5	1	24	
38	G124944	NUT, 5/8-18 SAE JAM	1	12	
39	G126178	NUT,1/4-20 SERRATED FLANGE	2	288	
40	G131016	WASHER, 5/8 SAE FLAT	4	48	
41	G180044	SCREW, 1/4-20 X 2 USS CAP	2	288	
42	G189306	SCREW, 3/8-16 X 3-1/2 USS CAP; GRADE 8	1	24	
43	G431799	LOCKNUT, 3/8-16 USS NYLOCK HEX	1	24	

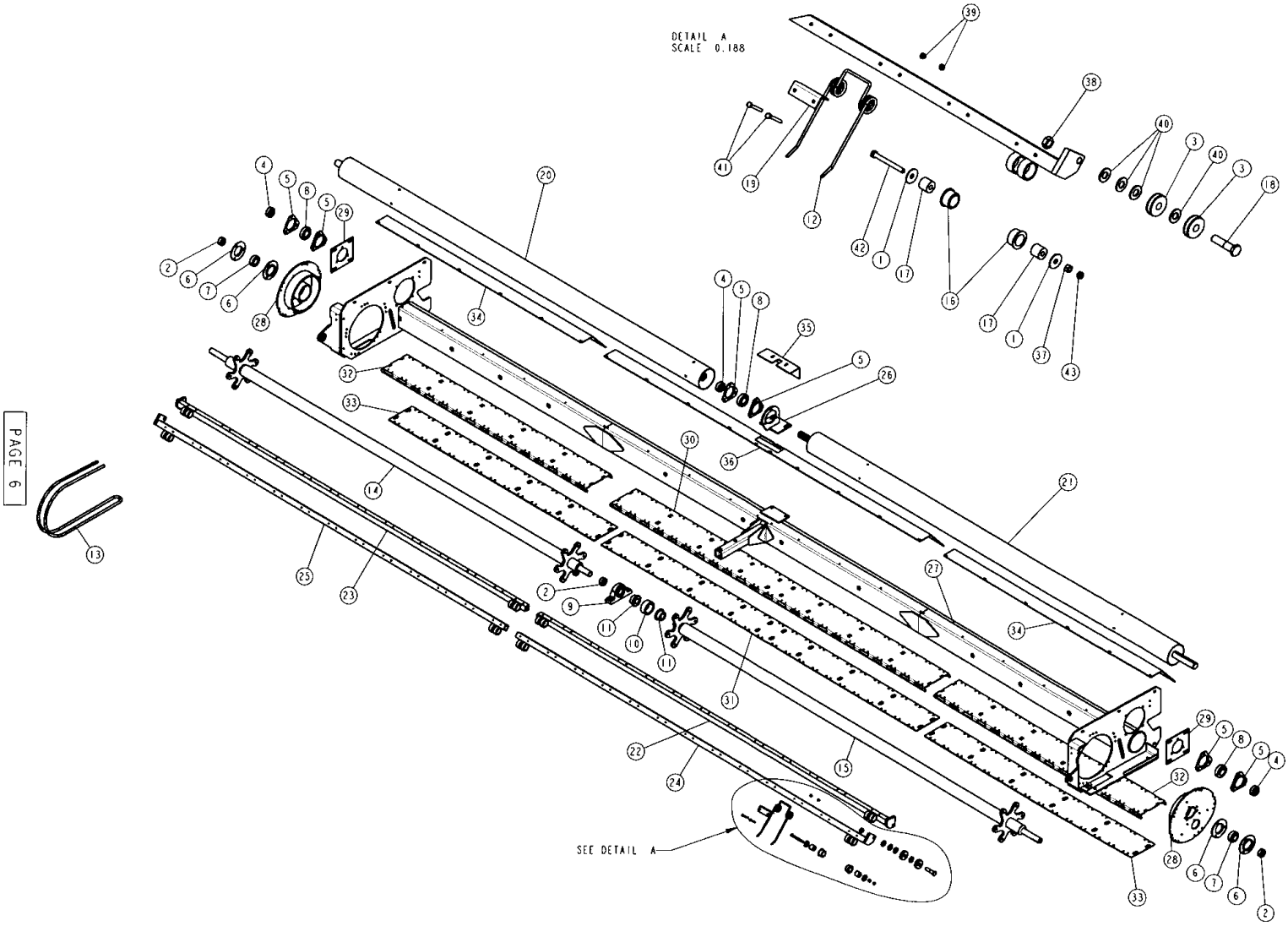
DETAIL A
SCALE 0.188
SEE DETAIL A

19' LIFTER CONDITIONER PICK-UP FRAME

ITEM	PART NUMBER	DESCRIPTION	QTY SHOWN	QTY REQ'D	COMMENTS
1	1641	WASHER, 1-3/8 X 13/32 X 14GA.	2	48	
2	3005	COLLAR, 1.3/16 ECC. LOCKING	3		
3	3010	BEARING, 5/8 CAM FOLLOWER RADIAL	2	24	
4	3080	COLLAR, 1-7/16 ECCENTRIC LOCKING	3		
5	3091	FLANGETTE, 72MS FOR 1-3/8 & 1-7/16 BEARING	6		
6	3093	FLANGETTE, 62MS FOR 1.3/16 BEARING	4		
7	3096	INSERT, 1.3/16 REPLACEMENT BEARING	2		
8	3098	INSERT, 1-7/16 REPLACEMENT BEARING W/COLLAR	3		
9	3171	BEARING, 1.3/16 PILLOW BLOCK	1		
10	4480	CHAIN, COUPLING ROLLER	1		
11	5730	COUPLING, C4016 X 2/1.3/16	2		
12	7079	SPRING, TORSION BENT; LONG	1	156	
13	7081	BAND, PICK-UP; 1/2" ROUND	1	53	
14	10884	ROTOR,RIGHT 19' HEADER PICKUP	1		
15	10885	ROTOR,LEFT 19' HEADER PICKUP	1		
16	20178	BUSHING, POLY. (STRIP./HEADER); 7/8 LONG	2	48	
17	20179	BUSHING, 1.063 OD X .406 ID X .948 AST	2	48	
18	20571	SCREW, 5/8-18 X 2-1/2; 1/4 HEAD	1	12	
19	61710	PLATE, SPRING RETAINER	1	156	
20	61752	ROLLER, VINE	1		
21	61843	ROLLER, VINE	1		
22	61872	BAR, 19' LEFT HEADER	1		
23	61873	BAR, 19' RIGHT HEADER	1		
24	61874	BAR, 19' LEFT HEADER	1		
25	61875	BAR, 19' RIGHT HEADER	1		
26	93576	MOUNT, CENTER BEARING	1		
27	94050	FRAME, 19' CLC	1		
28	94100	CAM, ROUND PICKUP	2		
29	127045	MOUNT, 3-HOLE FLANGE BEARING	2		
30	127122	PLATE, HEADER BAND MOUNTING	1		
31	127438	PLATE, HEADER BAND MOUNTING	1		
32	127729	PLATE, HEADER BAND MOUNTING	2		
33	127730	PLATE, HEADER BAND MOUNTING	2		
34	127775	SLIDE, END ROLLER	2		
35	127776	SHIELD, CENTER BEARING	1		
36	127851	SLIDE, CENTER ROLLER	1		
37	G120377	NUT, 3/8-16 USS; GRADE 5	1	24	
38	G124944	NUT, 5/8-18 SAE JAM	1	12	
39	G126178	NUT,1/4-20 SERRATED FLANGE	2	312	
40	G131016	WASHER, 5/8 SAE FLAT	4	48	
41	G180044	SCREW, 1/4-20 X 2 USS CAP	2	312	
42	G189306	SCREW, 3/8-16 X 3-1/2 USS CAP; GRADE 8	1	24	
43	G431799	LOCKNUT, 3/8-16 USS NYLOCK HEX	1	24	

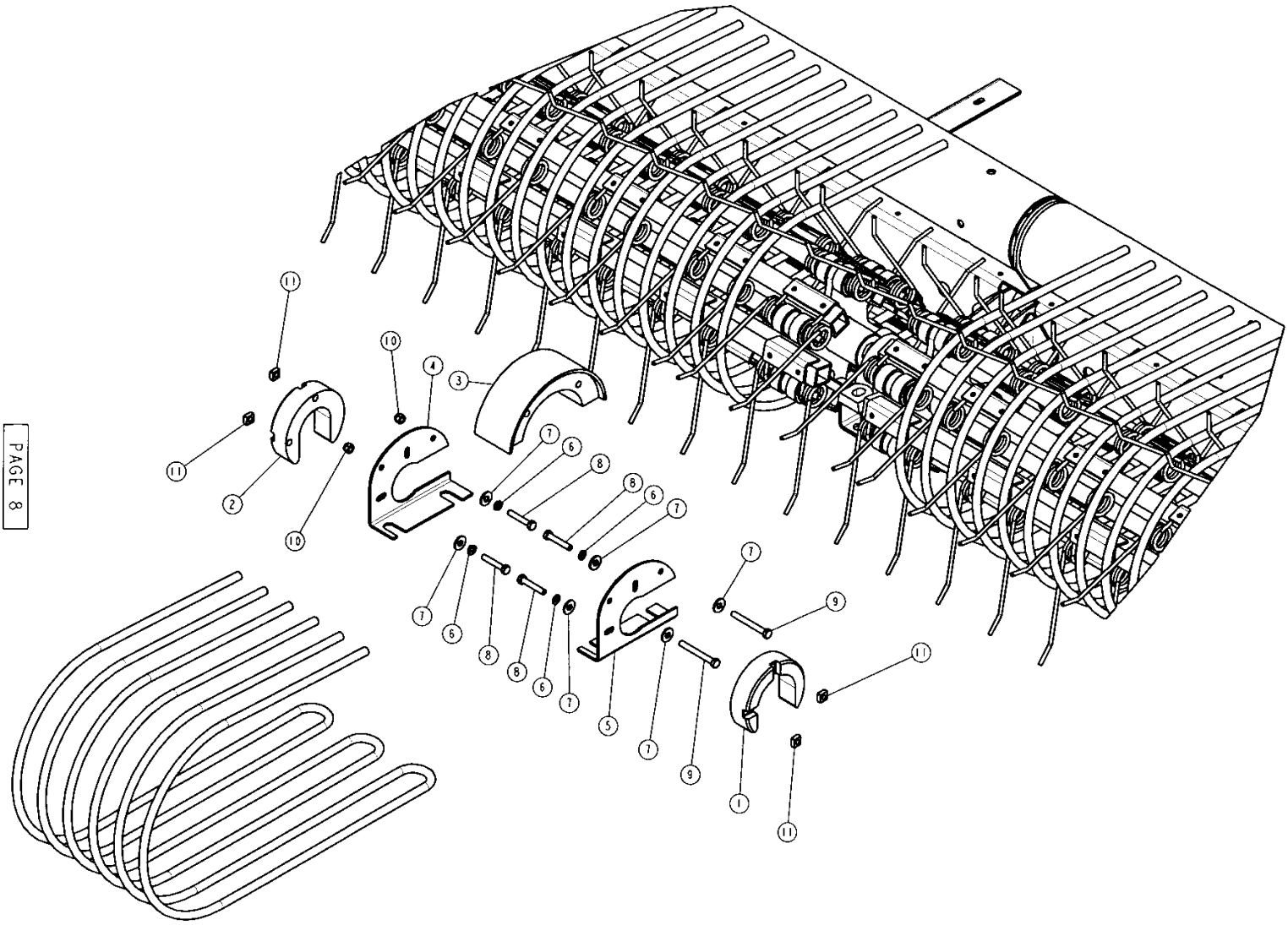
11
10
4
3
11
2
10
7
6
8
8
6
7
7
6
8
8
6
7
7
9
11
5
7
9
1
11

CENTER BEARING SHIELD

ITEM	PART NUMBER	DESCRIPTION	QTY SHOWN	QTY REQ'D	COMMENTS
1	20889	SHIELD, BEARING/SHAFT	1		
2	20890	SHIELD, BEARING/SHAFT	1		
3	20891	SHIELD, BEARING	1		
4	127803	SHIELD, BEARING (RIGHT/UPPER)	1		
5	128065	SHIELD, BEARING (LEFT/LOWER)	1		
6	G120214	LOCKWASHER, 5/16	4		
7	G131085	WASHER, 5/16 USS FLAT	6		
8	G180085	SCREW, 5/16-18 X 1-3/4 USS CAP	4		
9	G180112	SCREW, 5/16-18 X 2-3/4 USS CAP	2		
10	G431798	LOCKNUT, 5/16-18 USS NYLOCK HEX	2		
11	G9429152	NUT, 5/16-18 SQUARE	4		

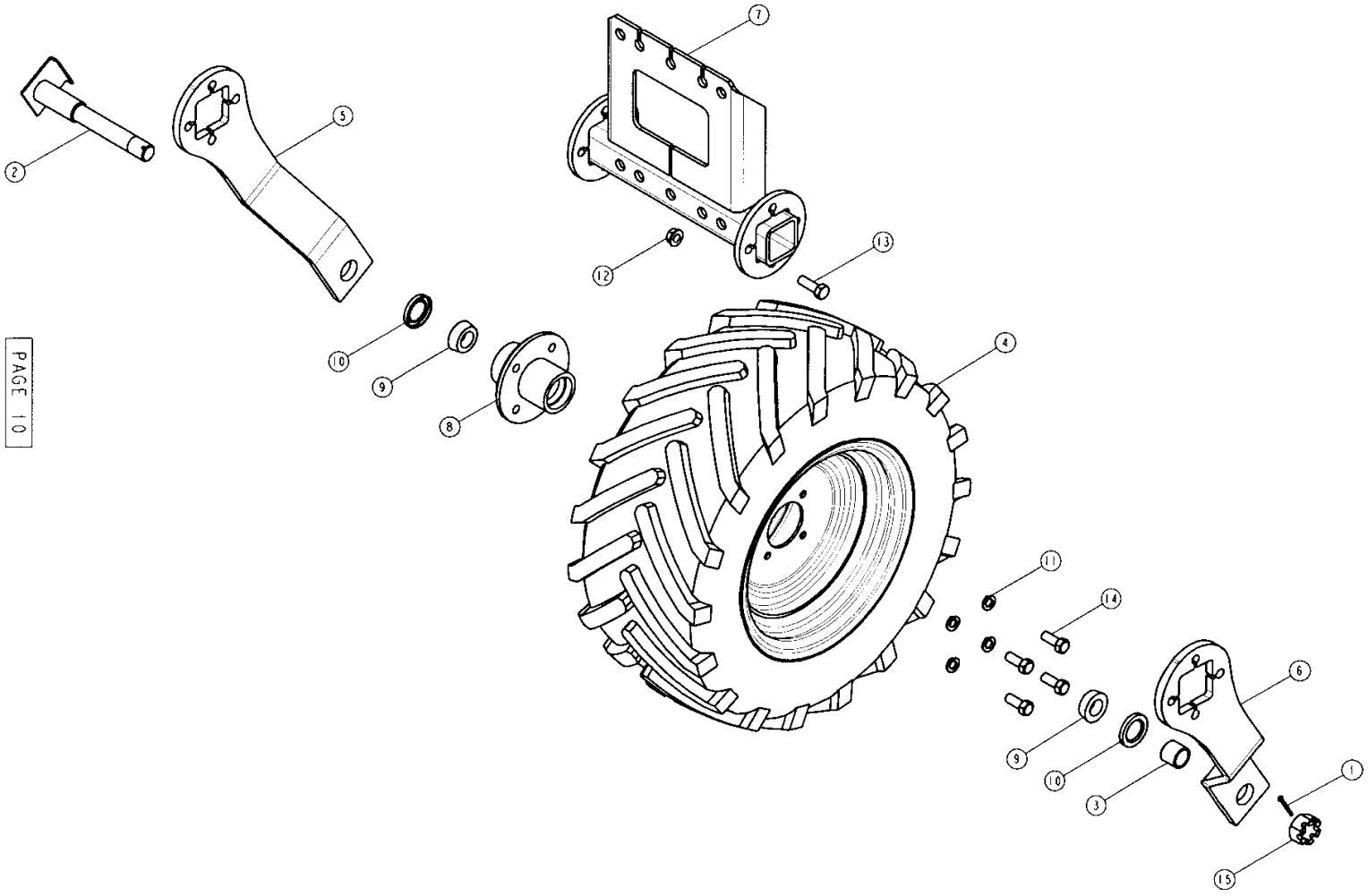
2
5
7
12
13
10
9
8
4
11
14
6
9
10
3
1
15

GAUGE WHEEL ASSEMBLY

ITEM	PART NUMBER	DESCRIPTION	QTY SHOWN	QTY REQ'D	COMMENTS
1	2212	PIN, COTTER 5/32X1-1/2	1		
2	10864	SPINDLE, DIGGER WHEEL	1		
3	20798	SPACER, 1 LG.	1		
4	80475	ASSEMBLY, WHEEL/TIRE;4-PLY 23X10.5-12	1		
5	93956	PLATE, GAUGE WHEEL FORK	1		
6	93970	PLATE, GAUGE WHEEL FORK	1		
7	94063	MOUNT, WHEEL	1		
8	80113A	ASSEMBLY, HUB & CUP ONLY	1		
9	80113B	CONE & ROLLER ASSEMBLY, FOR 1" SHAFT	2		
10	80113C	SEAL, FOR 1" BEARING	2		
11	G120384	LOCKWASHER, 1/2	4		
12	G128004	NUT, 1/2-13 SERRATED FLANGE	8		
13	G180177	SCREW, 1/2-13 X 1-1/2 USS CAP	8		
14	G181698	SCREW, 1/2-20 X 1-1/4 SAE CAP	4		
15	G272325	NUT, 1-14 SAE HEX SLOTTED	1		

PART NO.	PAGE
1400	3
1465	3
1641	5,7
1814	3
1815	3
1836	3
1837	3
1838	3
2020	3
2056	3
2196	3
2212	11
3005	5,7
3010	5,7
3080	5,7
3091	5,7
3093	5,7
3096	5,7
3098	5,7
3171	5,7
4480	5,7
5122	3
5730	5,7
7022	3
7023	3
7024	3
7079	5,7
7081	5,7
8519	3
10864	11
10884	7
10885	7
10925	5
10926	5
15936	3
20178	5,7
20179	5,7
20571	5,7
20798	11
20889	9
20890	9
20891	9
51051	3
51079	3
61710	5,7
61752	7
61843	7
61872	7
61873	7
61874	7
61875	7
61921	5
61922	5
61923	5
61924	5
61925	5
61926	5
80475	11
93576	5
93576	7
93608	3
93813	3
93956	11
93970	11
94049	3
94050	7
94056	3
94058	3
94063	11
94064	3
94066	3
94067	3
94069	3
94070	3
94071	3
94089	5
94096	3
94100	5,7
94242	3
127045	5,7
127122	5,7
127371	3
127438	5,7
127729	7
127730	7
127775	7
127776	5,7
127777	3
127778	3
127787	5
127788	5
127790	5
127803	9
127851	5,7
128065	9
4043D-104	3
4043D-69	3
60B13-1-7	3
60B23-1	3
80113A	11
80113B	11
80113C	11
G100030	3
G120214	9
G120377	5,7
G120384	11
G124944	5,7
G126178	5,7
G128004	11
G131016	5,7
G131085	9
G180044	5,7
G180085	9
G180112	9
G180177	11
G181698	11
G189306	5,7
G272325	11
G431798	9
G431799	5,7
G9429152	9
S94050	3
S94063	3
S94089	3

ONE-YEAR LIMITED WARRANTY
For AMADAS INDUSTRIES CROP LIFTER/CONDITIONER

A. General Provisions

The Warranties described below are provided by AMADAS INDUSTRIES ("AMADAS") through its authorized dealers to the original purchaser of each new AMADAS crop liter/conditioner. AMADAS will repair or replace, at its option, any part covered under warranty which is found to be defective in material or workmanship during the applicable period of warranty.

B. What is Warranted?

All parts of any new AMADAS crop lifter/conditioner, except tires, tubes, belts, chains, picking and header springs, and PTO drivelines are warranted for 12 months. The warranty period will begin when the combine is delivered to the purchaser. AMADAS will repair or replace, at its option, any new part or component under the above warranty, if a defect in material or workmanship appears in such part or component and is reported to AMADAS before the expiration of the applicable equipment warranty. Tires, tubes, belts, chains, picking and header springs, and PTO drivelines are not warranted by AMADAS beyond that offered by the items original manufacturer.

Used equipment is not warranted by AMADAS unless it is specifically covered by a separate warranty document. The above warranties cover only defective material and workmanship. The warranties do not cover any depreciation or failure caused by normal wear, lack of proper maintenance or use, misuse, lack of proper protection during storage, or accident. The purchaser shall pay all costs of routine maintenance and/or replacement of maintenance and wear items.

C. Unapproved Service or Modification

All Obligations of AMADAS under this warranty are terminated if the combine is modified or altered in ways not approved by AMADAS.

D. Securing Warranty Service

To secure warranty service, the purchaser must (1) report the product defect and request repair within the applicable warranty period, (2) present evidence of the date of delivery of the peanut combine, and (3) make the combine available to an AMADAS authorized dealer within a reasonable period of time.

E. No Dealer Warranty

The selling dealer makes no warranty of his own on any item warranted by AMADAS, and makes no warranty on other items. The dealer has no authority to make any representation or promise on behalf of AMADAS, or to modify the terms or limitations of this warranty in any way.

F. What are your Responsibilities?

a. Read the operator's manual before operating the equipment.
b. Perform all necessary maintenance as described in the operator's manual.
c. Deliver the machine to an AMADAS authorized dealer at your expense during normal working hours for any needed warranty services.
d. Contact an AMADAS authorized dealer promptly on any claim for warranty service.
e. Sign the AMADAS machinery delivery form, which will be given to you by the dealer.

G. Disclaimer

There are no warranties that extend beyond the description here. **ANY WARRANTIES OF MERCHANTABILITY AND FITNESS FOR ANY PARTICULAR PURPOSE ARE SPECIFICALLY DISCLAIMED AS ARE ALL OTHER REPRESENTATIONS TO THE PURCHASER.** AMADAS specifically excludes any liability on behalf of the company for any incidental or consequential damages including, but not limited to, crop loss, loss of profits, rental of substitute equipment, or other commercial losses. AMADAS shall not be responsible for expenses or inconveniences that you might incur or experience with respect to the AMADAS Crop Lifter/Conditioner, nor shall AMADAS be liable for defects, damage, or failures caused by improper storage, unreasonable use, or abuse, or accident, including the failure to provide reasonable and specified maintenance. This warranty applies only to the original purchaser of the equipment. Because some states do not allow the exclusion of limitations of incidental or consequential damages, the above limitation may not apply to you. This warranty gives you specific legal rights. You may also have other rights, which vary from state to state. Where there is a conflict between a provision of this warranty and the provision of any state, the state legislation prevails.

AMADAS

Revised 7/00