Model ADI-6
Amadas Digger/Inverter
6-Row

2nd Edition CAT254

Beginning S/N: 400500

Owner's Name _____

Dealer's Name _____

Serial Number _____ **Model No.** _____

Date Purchased _____

TABLE OF CONTENTS

CAT254
2nd Edition
October 1, 2003

Model ADI-6
AMADAS DIGGER / INVERTER; 6-ROW

(Beginning Serial # 400500)

Section		Page
1	Frame Assembly	3
2	Straight Shaft Conveyor Assembly	5
3	Inverter Assembly	7
4	Short Inverter Rotor Assembly	9
5	Inverter Rotor Assembly	11
6	Shield & Fender Assembly	13
7	Tractor Hydraulics Assembly; Standard Drive	15
8	Speed Indicator Kit	17
9	Vine Hold-Down Kit	19
10	Coulter Assembly	21
11	70694 Plow/Coulter Setup; 6 Row, Triple "V" Configuration	23
12	70695 Plow/Coulter Setup; 6 Row, 37/18/42 Configuration	25
13	70696 Plow/Coulter Setup; 6-Row, 40/20/46 Configuration	27
	ADI-4: Optional Blade and Coulter Configurations Diagram	
	Warranty	

NOTES

The Terms "Left" and "Right" used in the description of parts are determined by facing the direction of travel of the machine.
"A/R" found in the "No. Req'd" column denotes "As Required".
"OPT" found in the "No. Req'd" column denotes "Optional".

1100 Holland Road Suffolk, VA 23434 U.S.A.
(757) 539-0231 / Fax - (757) 934-3264

1701 S. Slappey Blvd. Albany, GA 31701
(229) 439-2217 / Fax (229) 439-9343

AMADAS INDUSTRIES

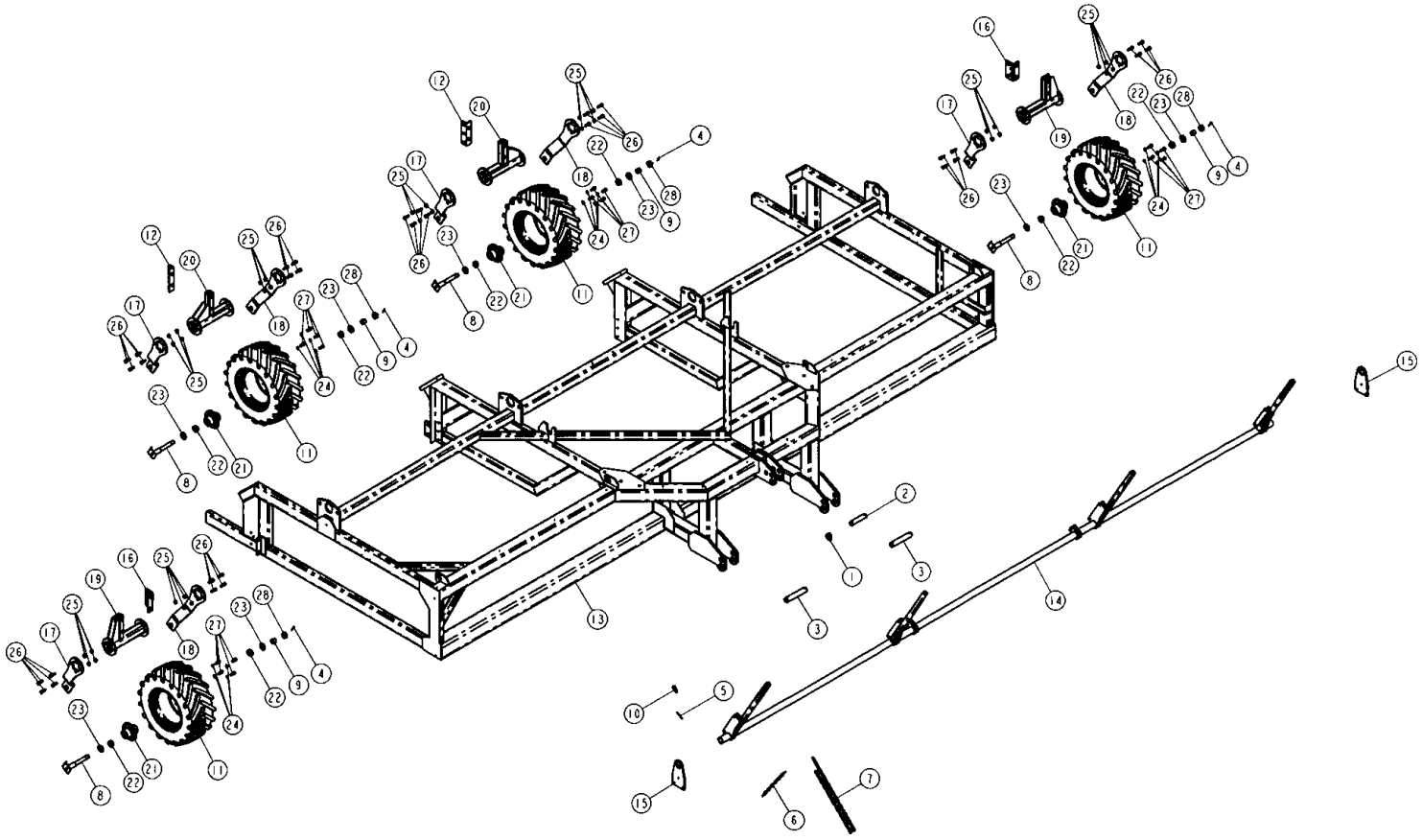
1
2
3
4
5
6
7
8
9
10
11
12
13
14
15
16
17
18
19
20
21
22
23
24
25
26
27
28

ITEM	PART NUMBER	DESCRIPTION	QTY SHOWN	QTY REQ'D	COMMENTS
1	1465	PIN, LYNCH; 7/16 X 2 HD	1	6	
2	1814	PIN, UPPER HITCH	1		
3	1815	PIN, LOWER HITCH	2		
4	2212	PIN, COTTER 5/32X1-1/2	4		
5	2244	PIN, ROLL 1/4" X 2.1/2" LG.	1	2	
6	4293-13	CHAIN,3/16 COIL; 13 LINKS	1	4	
7	4293-39	CHAIN,3/16 COIL; 39 LINKS	1	4	
8	10864	SPINDLE, DIGGER WHEEL	4		
9	20798	SPACER, 1 LG.	4		
10	80458	SNAP, SPRING; 1/4"	1	4	
11	80475	ASSEMBLY, WHEEL/TIRE;4-PLY 23X10.5-12	4		
12	93788	BRACKET, WHEEL MOUNT; CENTER	2		
13	93789	FRAME, DIGGER; 6-ROW	1		
14	93817	LIFT, 6-ROW	1		
15	93819	MOUNT, CONVEYOR LIFT	2		
16	93850	MOUNT, WHEEL; REAR	2		
17	93956	PLATE, GAUGE WHEEL FORK	4		
18	93970	PLATE, GAUGE WHEEL FORK	4		
19	93996	MOUNT, OUTER WHEEL	2		
20	93997	MOUNT, INNER WHEEL	2		
21	80113A	ASSEMBLY, HUB & CUP ONLY	4		
22	80113B	CONE & ROLLER ASSEMBLY, FOR 1" SHAFT	8		
23	80113C	SEAL, FOR 1" BEARING	8		
24	G120384	LOCKWASHER, 1/2	16		
25	G128004	NUT, 1/2-13 SERRATED FLANGE	32		
26	G180177	SCREW, 1/2-13 X 1-1/2 USS CAP	32		
27	G181698	SCREW, 1/2-20 X 1-1/4 SAE CAP	16		
28	G272325	NUT, 1-14 SAE HEX SLOTTED	4		

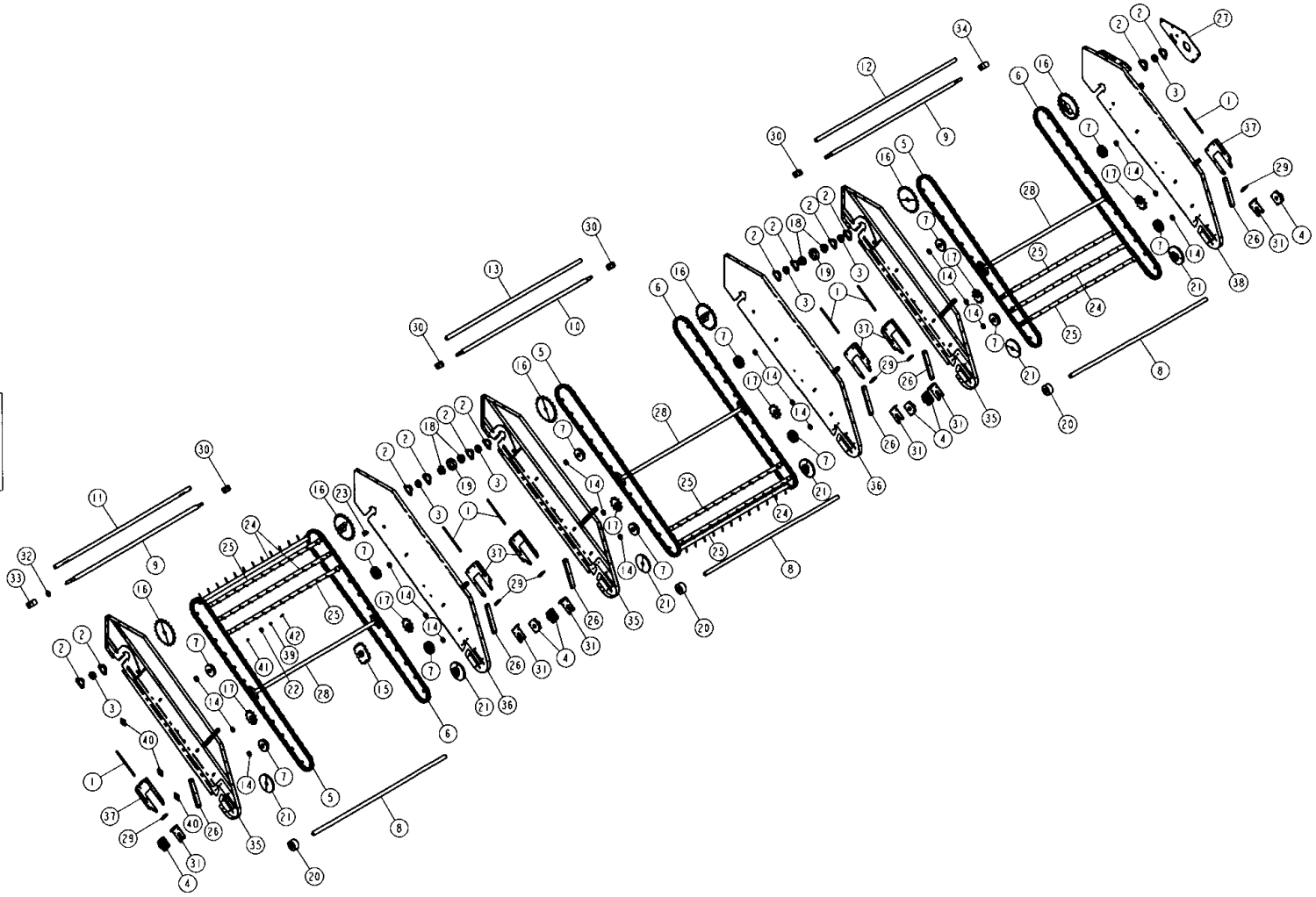

ADI-6 STRAIGHT SHAFT CONVEYOR

ITEM	PART NUMBER	DESCRIPTION	QTY SHOWN	QTY REQ'D	COMMENTS
1	1825	ROD, ADJUSTING; 5/8-11 X 12.0 LG.	6		
2	3091	FLANGETTE, 72MS FOR 1-3/8 & 1-7/16 BEARING	12		
3	3098	INSERT, 1-7/16 REPLACEMENT BEARING W/COLLAR	6		
4	3253	BEARING, 1.7/16" 4-H; TRIPLE LIP	6		
5	4454-104_L	CHAIN, CA557 W/AR; 103 PIT'S + CONN.	3		ORDER PART # 4454-104
6	4454-104_R	CHAIN, CA557 W/A4; 103 PIT'S + CONN.	3		ORDER PART # 4454-104
7	5120	IDLER, 4.1/2 CHAIN	12		
8	10831	SHAFT, IDLER; DIGGER	3		
9	10835	SHAFT, DIGGER; 4 & 6 ROW OUTER	2		
10	10837	SHAFT, DIGGER; 6-ROW INNER	1		
11	10845	SHAFT, DRIVE; RIGHT	1		
12	10846	SHAFT, DRIVE; LEFT	1		
13	10847	SHAFT, DRIVE; CENTER	1		
14	20783	SPACER, IDLER	18		
15	51610	IDLER, CHAIN; "SQUARE"	1	OPT	
16	51620	SPROCKET, SPLIT; CA500 SERIES 20-TOOTH	6		
17	51625	IDLER, 10-TOOTH CA550; ECCENTRIC	6		
18	51629	SPROCKET, COUPLER; C5016X1.7/16	4		
19	51630	CHAIN, COUPLING ROLLER	2		
20	51655	IDLER, RUBBER ROLLER	3		
21	51656	IDLER, CA557 CHAIN	6		
22	61784	CLEAT, BAR END; RIGHT	1	39	
23	61785	CLEAT, BAR END; LEFT	1	39	
24	61789	BAR, CONVEYOR; FLAT TAB	4	39	
25	61790	BAR, CONVEYOR; OPP; TAB END	6	39	
26	80455	BUMPER, DIGGER SIDE	6		
27	93796	COVER, MOTOR MOUNT	1		
28	93801	BRACE, CROSS	3		
29	93841	NUT, CONVEYOR ADJUSTER	6		
30	127215	SPACER, INVERTER MOUNT	4		
31	127231	BRACKET, DIGGER SIDE	6		
32	127238	WASHER, DIGGER	1	A/R	
33	127398	SPACER, PIVOT SHAFT; OFFSET	1		
34	127444	SPACER, PIVOT SHAFT; OFFSET	1		
35	127450	SIDE, CONV.; RIGHT	3		
36	127451	SIDE, CONV. LEFT	2		
37	127452	MOUNT, BEARING	6		
38	127453	SIDE, CONV. DRIVE	1		
39	127509	WASHER,7/8 SQ.; CONV. BAR	1		
40	127539	WASHER, IDLER	3	18	
41	G124821	NUT, 3/8-16 LOCK FLANGE (STOVER)	1		
42	G180126-8	SCREW, 3/8-16 X 1.1/2 USS CAP GRADE 8	1		

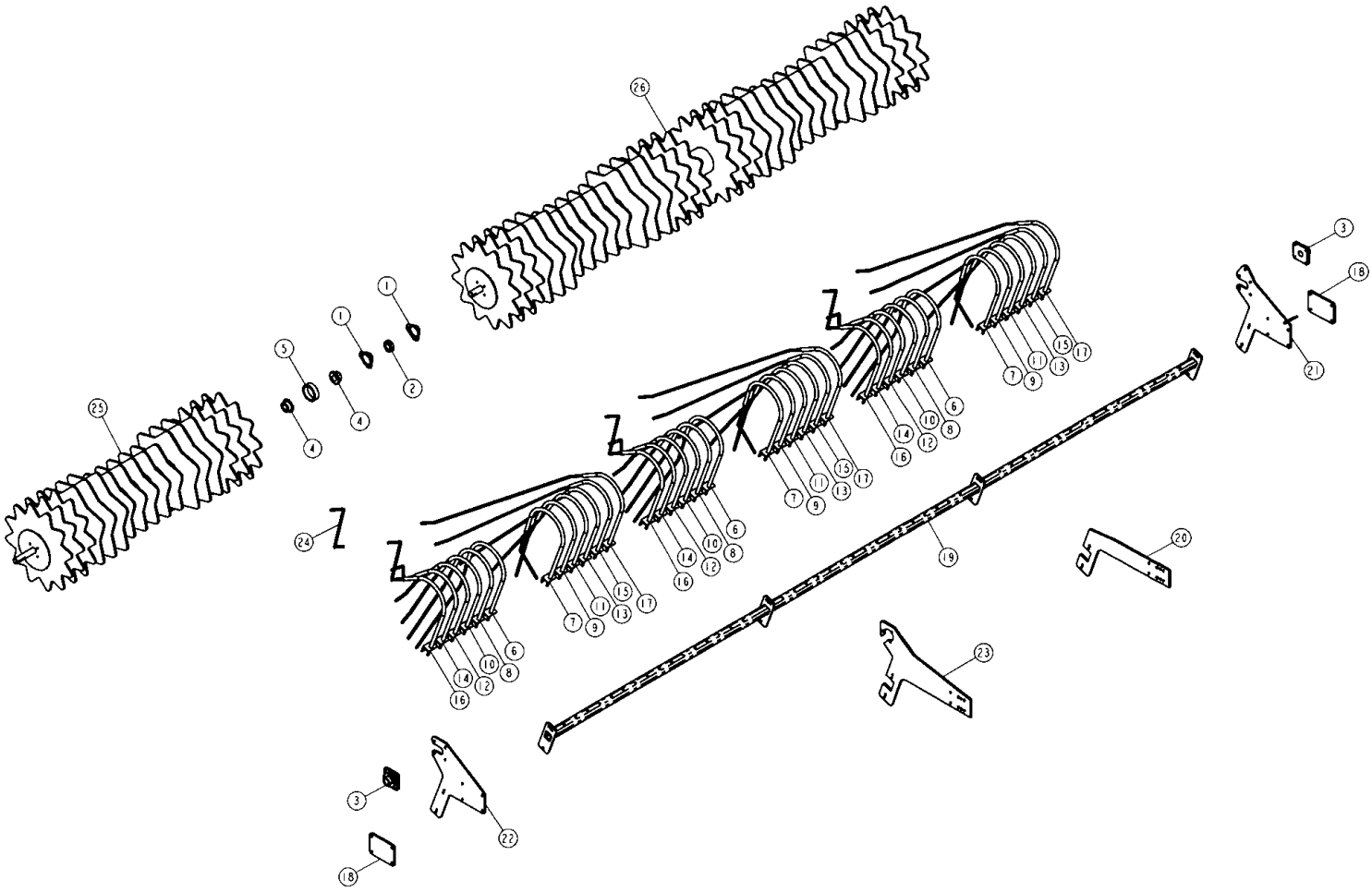
1
2
3
4
5
6
7
8
9
10
11
12
13
14
15
16
17
18
19
20
21
22
23
24
25
26

ITEM	PART NUMBER	DESCRIPTION	QTY SHOWN	QTY REQ'D	COMMENTS
1	3091	FLANGETTE, 72MS FOR 1-3/8 & 1-7/16 BEARING	2		
2	3098	INSERT, 1-7/16 REPLACEMENT BEARING W/COLLAR	1		
3	3181	BEARING, 1-7/16 4-HOLE FLANGE	2		
4	51629	SPROCKET, COUPLER; C5016X1.7/16	2		
5	51630	CHAIN, COUPLING ROLLER	1		
6	61846_ROLL	ROD, INVERTER; RIGHT 6	3		ORDER PART #61846
7	61847_ROLL	ROD, INVERTER; LEFT 6	3		ORDER PART #61847
8	61848_ROLL	ROD, INVERTER; RIGHT 5	3		ORDER PART #61848
9	61849_ROLL	ROD, INVERTER; LEFT 5	3		ORDER PART #61849
10	61850_ROLL	ROD, INVERTER; RIGHT 4	3		ORDER PART #61850
11	61851_ROLL	ROD, INVERTER; LEFT 4	3		ORDER PART #61851
12	61852_ROLL	ROD, INVERTER; RIGHT 3	3		ORDER PART #61852
13	61853_ROLL	ROD, INVERTER; LEFT 3	3		ORDER PART #61853
14	61854_ROLL	ROD, INVERTER; RIGHT 2	3		ORDER PART #61854
15	61855_ROLL	ROD, INVERTER; LEFT 2	3		ORDER PART #61855
16	61856_ROLL	ROD, INVERTER; RIGHT 1	3		ORDER PART #61856
17	61857_ROLL	ROD, INVERTER; LEFT 1	3		ORDER PART #61857
18	93765	CLAMP, INVERTER MOUNT	2		
19	93794	MOUNT, INVERTER ROD; 6-ROW	1		
20	94004	BRACKET, INVERTER ROD MOUNT SUPPORT	1		
21	94005	MOUNT, INVERTER; LEFT	1		
22	94006	MOUNT, INVERTER; RIGHT	1		
23	94008	SUPPORT, 6-ROW INVERTER SHAFT	1		
24	140509	HOSE, INVERTER ROD COVER	1	144'	4'/INVERTER ROD
25	S61800-1	ASSEMBLY, SPECIAL 6-ROW INVERTER SHAFT	1		
26	S61801-1	ROTOR, INVERTER; 4-ROW	1		

PART NUMBER	DESCRIPTION	QTY REQ'D	COMMENTS
61856EX	ROD, INVERTER; RIGHT 0	OPT	
61857EX	ROD, INVERTER; LEFT 0	OPT	

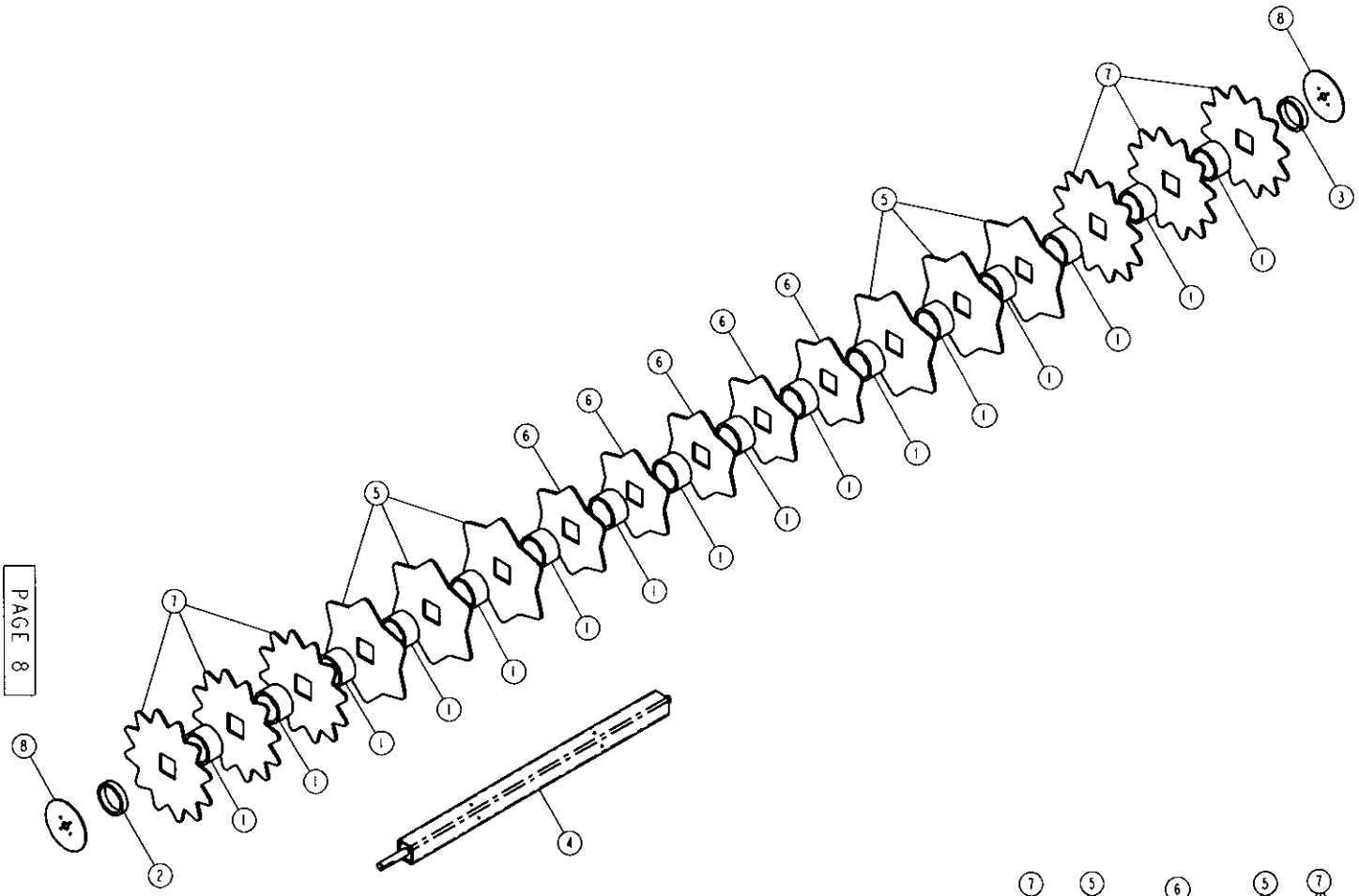
8
7
3
5
1
6
2
4

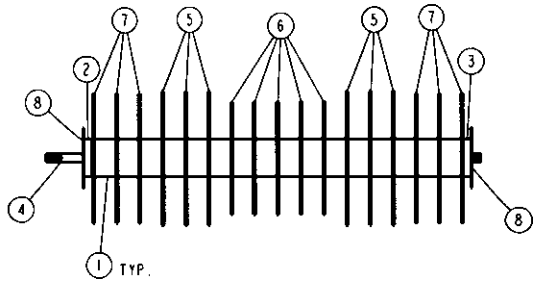
7
5
6
5
7
2
3
8
4
8
1 TYP.

ADI-6 SHORT INVERTER ROTOR

ITEM	PART NUMBER	DESCRIPTION	QTY SHOWN	QTY REQ'D	COMMENTS
1	20751	SPACER, 3.5/8; INVERTER ROTOR	16		
2	20769	SPACER, 1.5/16; INVERTER ROTOR	1		
3	20780	SPACER, 1.313; INVERTER ROTOR	1		
4	61800	ROTOR, INVERTER	1		
5	80448	DISC, 95A CAST URETHANE; 23.1/2 DIA.	6		
6	80449	DISC, 95A CAST URETHANE; 19.3/4"	5		
7	80498	DISC, 95A CAST URETHANE; 23.1/2" DIA.	6		
8	127235	CAP, INVERTOR ROTOR	2		

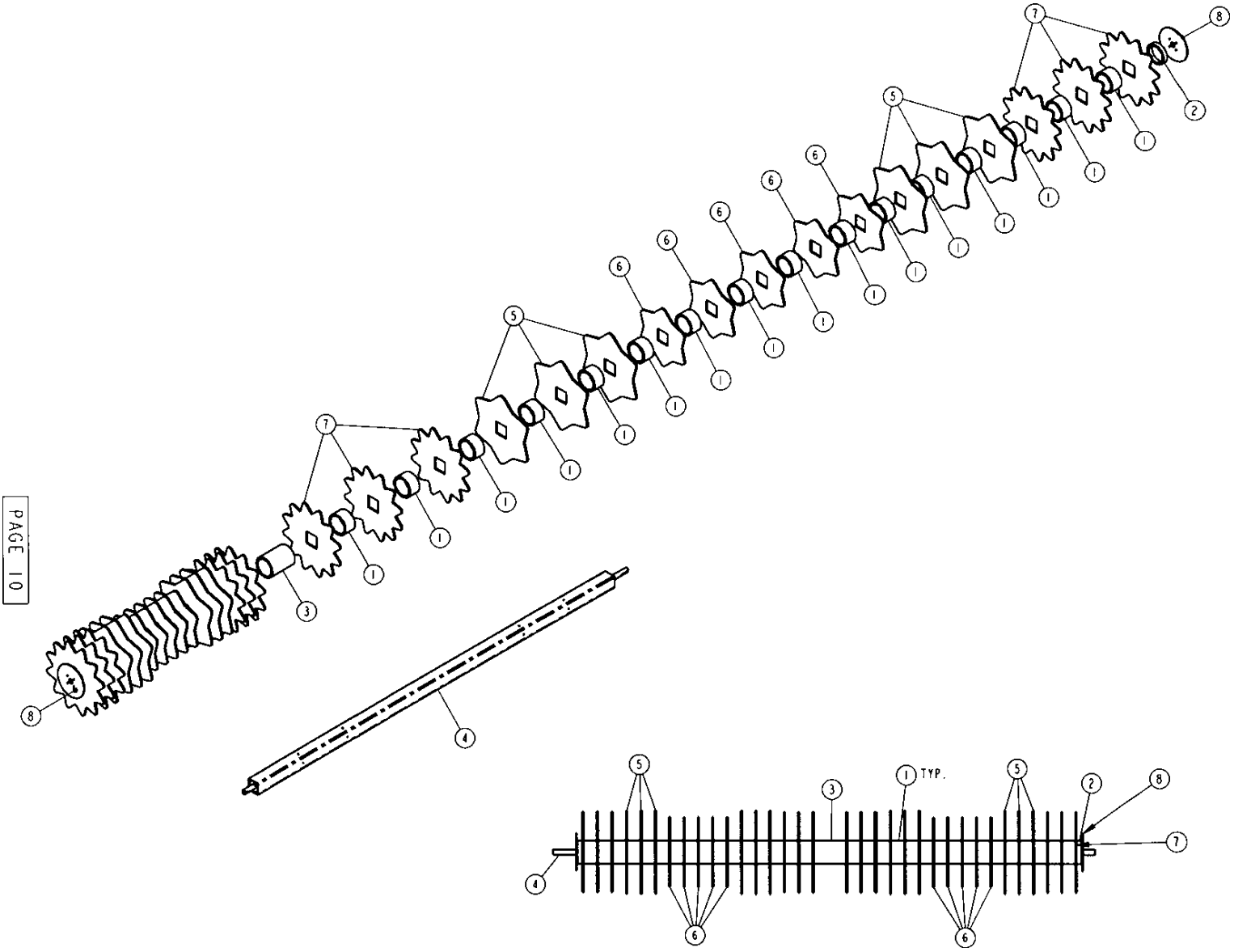
1
2
3
4
5
6
7
8

1 TYP.
2
3
4
5
6
7
8

AD1-6 INVERTER ROTOR

ITEM	PART NUMBER	DESCRIPTION	QTY SHOWN	QTY REQ'D	COMMENTS
1	20751	SPACER, 3.5/8; INVERTER ROTOR	32		
2	20769	SPACER, 1.5/16; INVERTER ROTOR	2		
3	20776	SPACER, 9.0"; INVERTER ROTOR	1		
4	61801	ROTOR,6-ROW INVERTER;LONG	1		
5	80448	DISC, 95A CAST URETHANE; 23.1/2 DIA.	12		
6	80449	DISC, 95A CAST URETHANE; 19.3/4"	10		
7	80498	DISC, 95A CAST URETHANE; 23.1/2" DIA.	12		
8	127235	CAP, INVERTOR ROTOR	2		

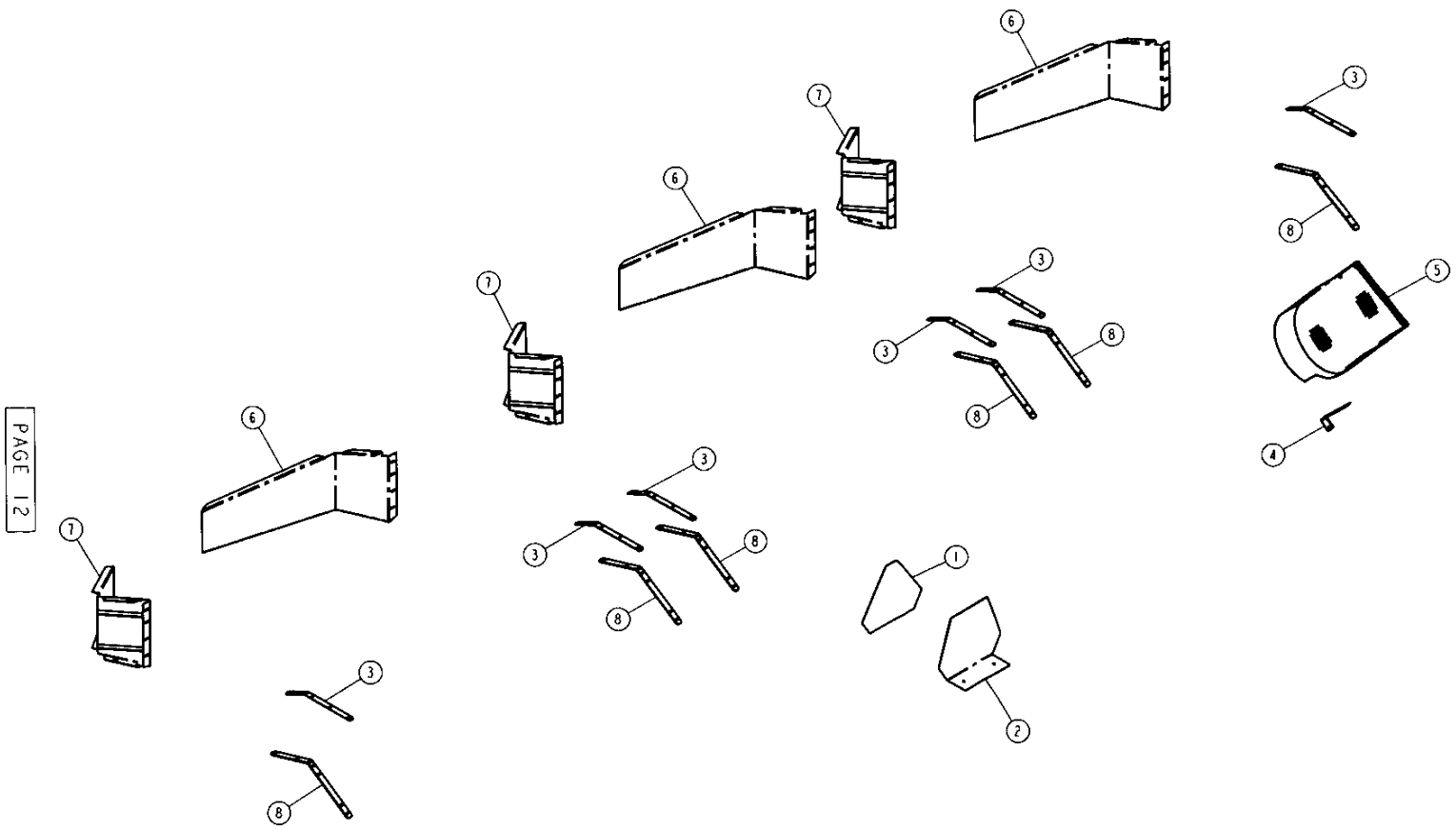
1
2
3
4
5
6
7
8

ADI-6 SHIELDS AND FENDERS

ITEM	PART NUMBER	DESCRIPTION	QTY SHOWN	QTY REQ'D	COMMENTS
1	8519	DECAL, SLOW MOVING VEHICLE	1		
2	93813	MOUNT, SMV DECAL	1		
3	127457	BRACE, CONV. SIDE	6		
4	127460	BRACE, SHIELD	1		
5	127461	SHIELD, DRIVE	1		
6	127462	FENDER, RIGHT	3		
7	127463	FENDER, LEFT	3		
8	127517	BRACE, LOWER; FENDER	6		

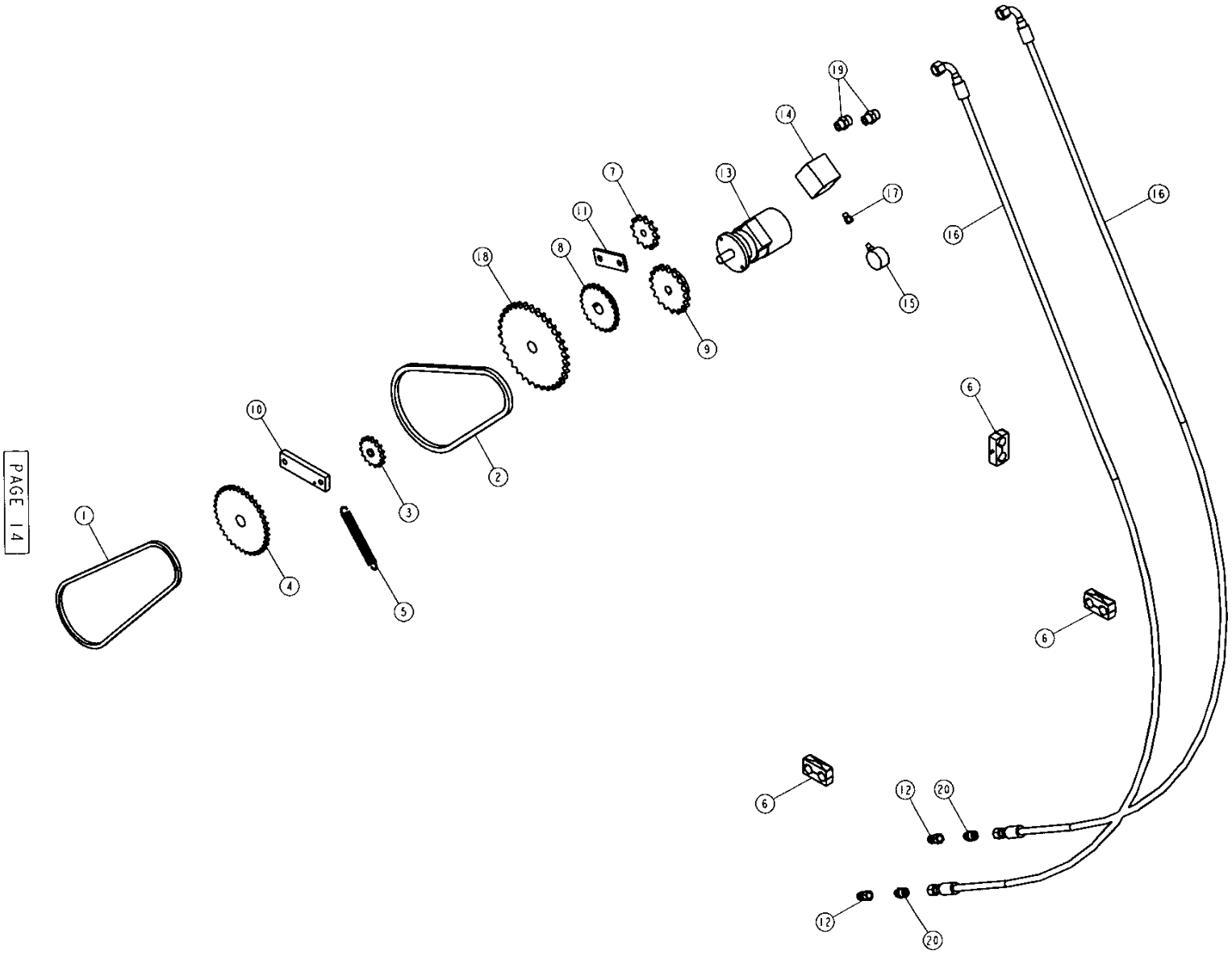
1
2
3
4
5
6
6
6
7
8
9
10
11
12
12
13
14
15
16
16
17
18
19
20
20

ITEM	PART NUMBER	DESCRIPTION	QTY SHOWN	QTY REQ'D	COMMENTS
1	4043-82	CHAIN, NO.60; 81 PITS + CONN.	1		
2	4365-58	CHAIN, NO. 80; 57 PITS + CONN.	1		
3	5122	IDLER, NO.60 CHAIN SPROCKET	1		
4	5581	SPROCKET, 60B36 FI-7/16	1		
5	7019	SPRING, 8-1/4 LG X 1 OD X .125 EXTENSION	1		
6	20289	CLAMP, DUAL 1.3/16 OD HOSE; S/S	3		
7	51040	IDLER, CHAIN 80A12X3/4 SPROCKET	1		
8	51079	SPROCKET, 60B24 FI-7/16; 2 SETSCREWS	1		
9	51660	SPROCKET, 80B18 SPECIAL	1		
10	93766	BAR, IDLER SPRING	1		
11	127458	WASHER, CHAIN IDLER	1		
12	140341	COUPLER,8 ORBF-1/2 QDM	2		
13	140485	MOTOR, HYD.; 18.3 CU. IN. W/MANIFOLD	1		
14	140486	MANIFOLD, HYD. W/CHECK & GUAGE PORT	1		
15	140506	GUAGE, PRESSURE; 5000 PSI	1		
16	140513	HOSE, 3/4 X 234" HYD.	2		
17	140545	HYDFITTING,-6 ORB X 1/4 NPTF	1		
18	80B34-1-7	SPROCKET, 80B34; FI.7/16; 2 SETS.	1		
19	J38H1163	ADAPTER,12 ORB X 12 ORF	2		
20	J38H1317	HYDF. -10 ORS TO -8 ORB STRT	2		

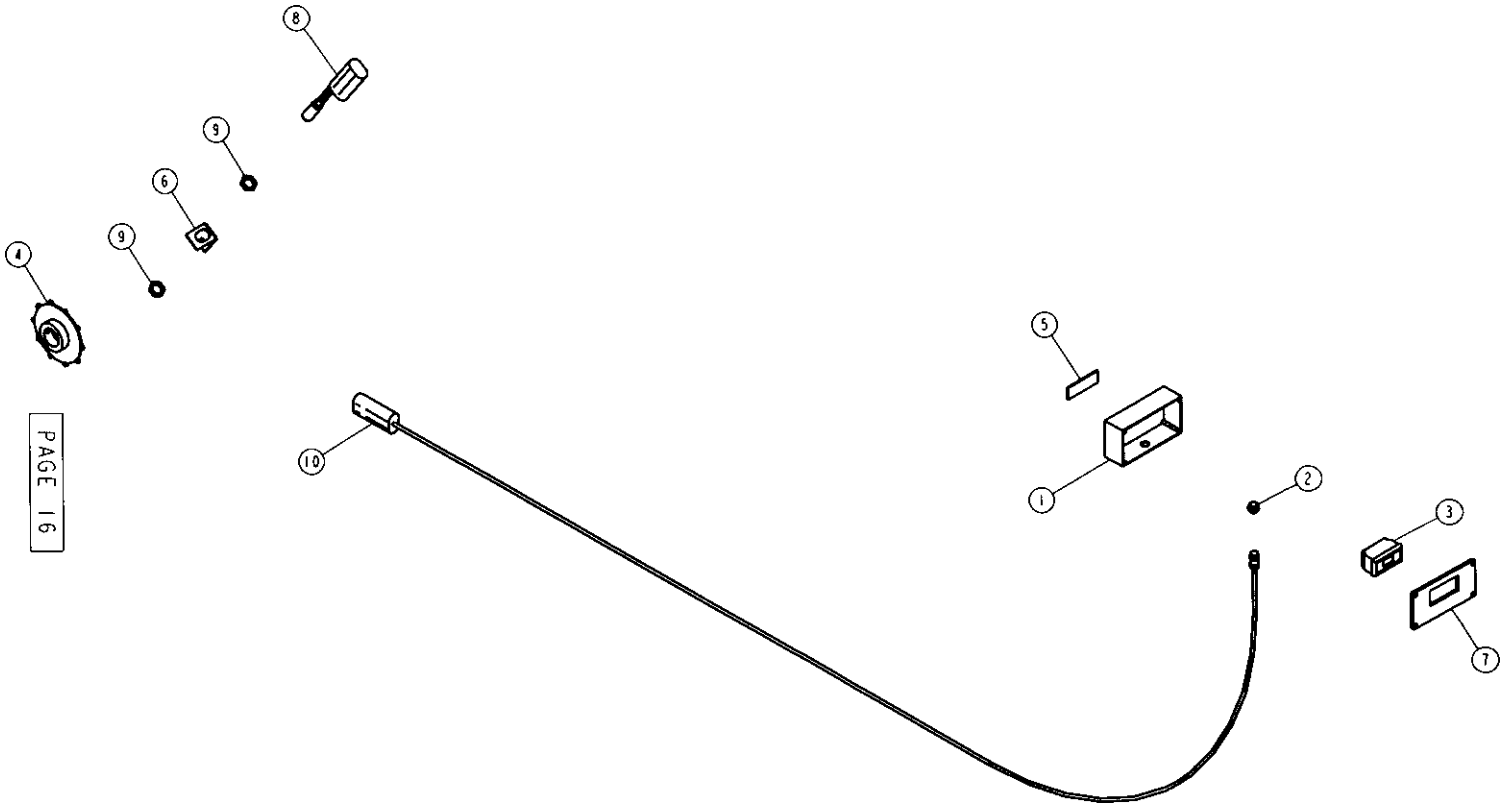
8
9
6
9
4
10
5
1
2
3
7

ADI-6 SPEED INDICATOR

ITEM	PART NUMBER	DESCRIPTION	QTY SHOWN	QTY REQ'D	COMMENTS
1	15465	BOX, PLASTIC JUNCTION W/1 HOLE	1		
2	15468	SOCKET, 4 PIN CHASSIS MOUNT	1		
3	16942	READOUT, SPEED IND./WIRE; PROGRAMMABLE	1		
4	51619	DISC, SPEED INDICATOR	1		
5	80408	VELCRO, HOOK & LOOP, 1" WIDE	1	.25 FT	
6	127424	BRACKET, PICK-UP	1		
7	15464C	COVER, PLASTIC JUNCTION BOX; W/HOLE	1		
8	JAH116104	SENSOR, SHAFT SPEED (40-47)	1		
9	JH104418	NUT, SENSOR FOR TRANSMISSION	2		
10	S15569-30	CABLE, SPEED INDICATOR; 6-ROW DIGGER	1		

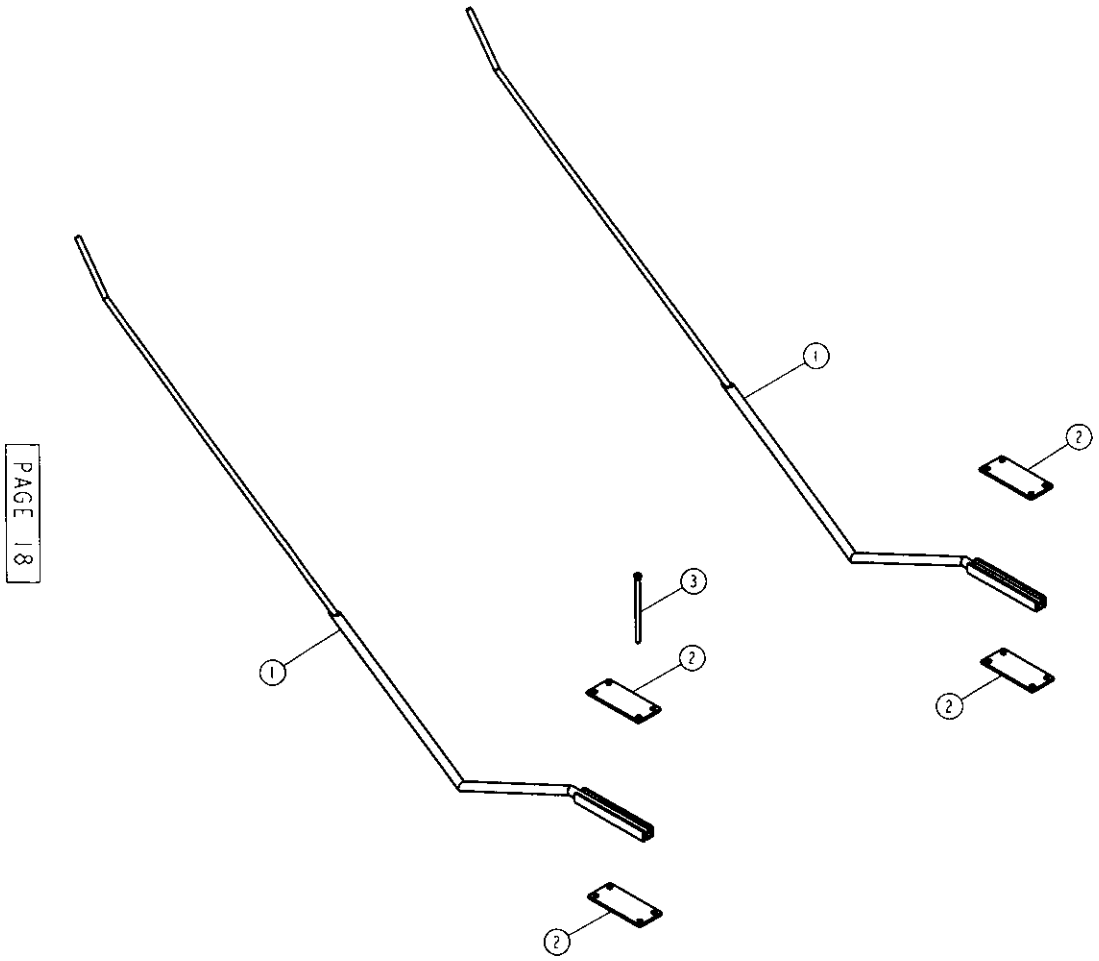
1
2
2
1
3
2
2

VINE HOLD DOWN KIT - 6 ROW

ITEM	PART NUMBER	DESCRIPTION	QTY SHOWN	QTY REQ'D	COMMENTS
1	93778	GUIDE, VINE	2	6	
2	93779	CLAMP, VINE GUIDE	4	12	
3	G191173	SCREW, 3/8-16 X 7 USS CAP	1	24	

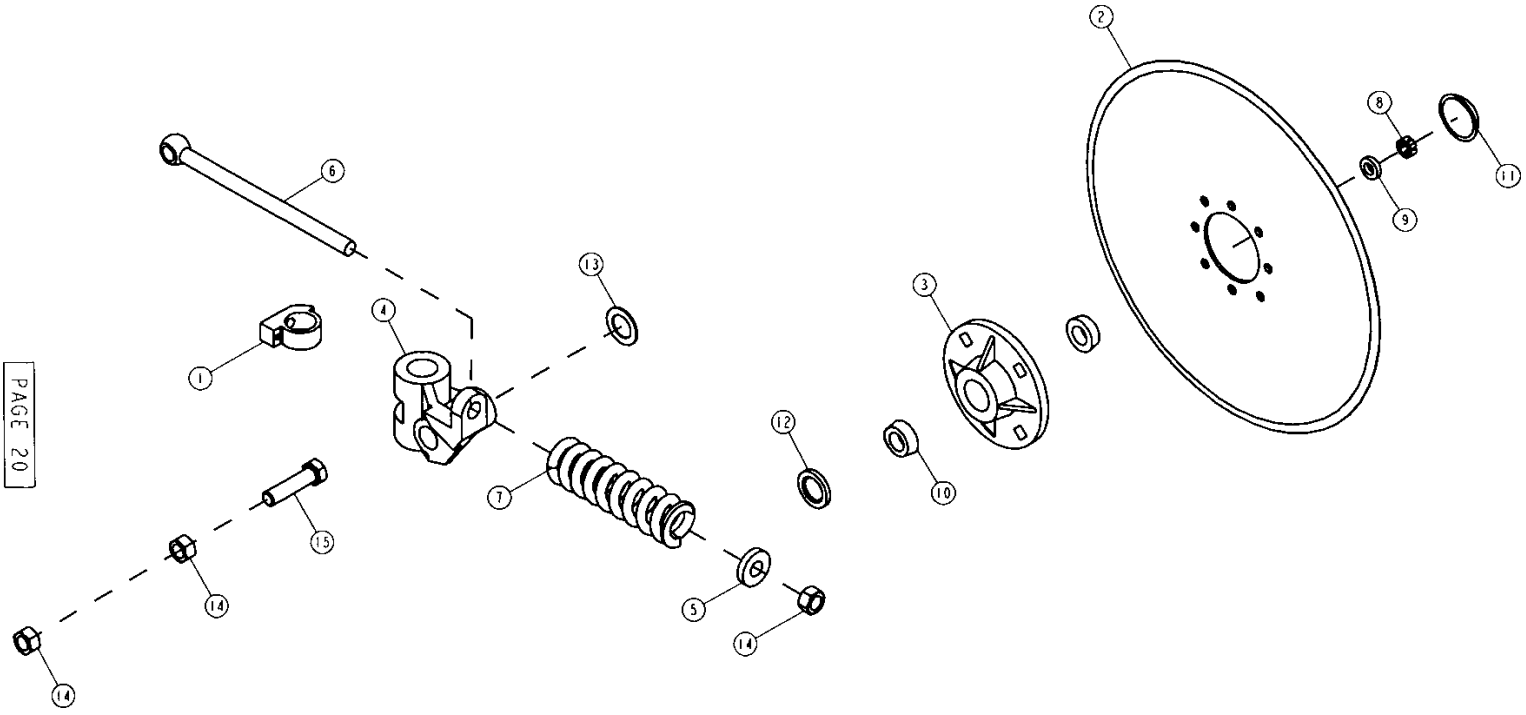
1
2
3
4
5
6
7
8
9
10
11
12
13
14
14
14
15

COULTER PARTS

ITEM	PART NUMBER	DESCRIPTION	QTY SHOWN	QTY REQ'D	COMMENTS
1	80502	COLLAR, "RIGID" COULTER	1		
2	80464A	DISC, COULTER	1		
3	80464B	HUB, COULTER	1		
4	80464C	PIVOT, COULTER	1		
5	80464D	WASHER, COULTER	1		
6	80464E	ROD, COULTER	1		
7	80464F	SPRING, #33 COMPRESSION	1		
8	80464G	NUT, 5/8-18 SLOTTED HEX	1		
9	80464H	WASHER, 5/8	1		
10	80464J	CONE, LM67048	2		
11	80464K	CAP, HUB	1		
12	80464L	SEAL, CR16069	1		
13	80464P	WASHER, 1.17/64 ID X 1.7/8 OD X 14 GA	1		
14	G220086	NUT, 3/4-10 USS	3		
15	G271775	SCREW, 3/4-10 X 3 USS CAP	1		

PART NUMBER	DESCRIPTION	QTY REQ'D	COMMENTS
80464M	KIT, BOLT	1	NOT SHOWN

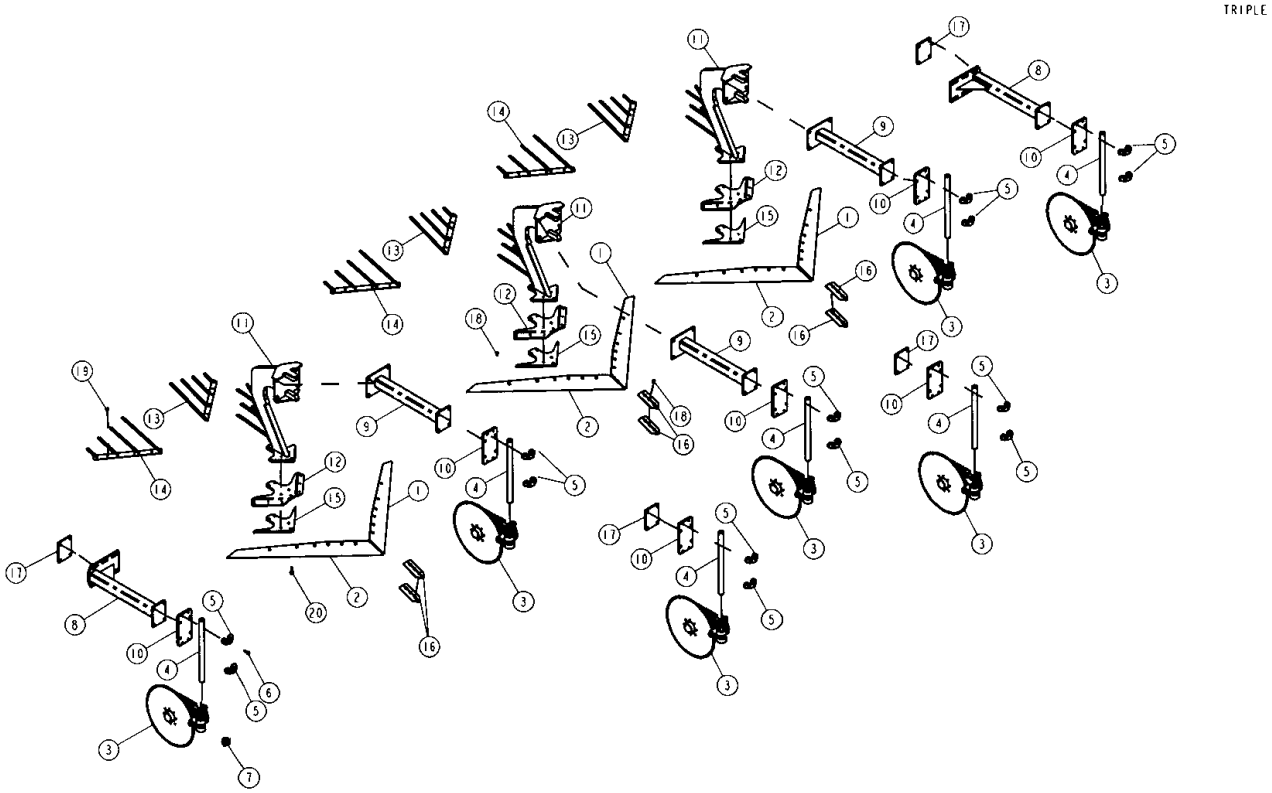

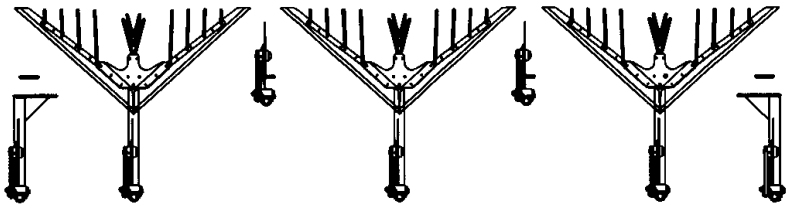

BOTTOM VIEW

70694 PLOW/COULTER SETUP - 6-ROW

ITEM	PART NUMBER	DESCRIPTION	QTY SHOWN	QTY REQ'D	COMMENTS
1	61777	BLADE, CENTER; RIGHT	3		
2	61778	BLADE, CENTER; LEFT	3		
3	80464	ASSEMBLY, COULTER W/BLADE	7		
4	80499	SHANK, 22" LG. X 1.1/2	7		
5	80500	CLAMP, COULTER, 1.1/2	14		
6	80501	SETSCREW,1/2-13X1-1/2 SQ HEAD	1	21	
7	80502	COLLAR, "RIGID" COULTER	1	7	
8	93824	MOUNT, COULTER; OFFSET	2		
9	93825	MOUNT, COULTER; STEPPED	3		
10	94002	MOUNT, YETTER COULTER	7		
11	127464	MOUNT, CENTER PLOW	3		
12	127465	BASE,CENTER PLOW MOUNT	3		
13	127466	GUIDE, CENTER PLOW; LEFT	3		
14	127476	GUIDE, PLOW ROD; RIGHT	3		
15	127602	SUPPORT, 127465	3		
16	127603	COVER, PLOW POINT GAP	6		
17	93824C	PLATE, COULTER MOUNT	4		
18	G101536	BOLT, 3/8-16 X 1.1/4 PLOW	2	27	
19	G101637	BOLT, 3/8-16 X 1 PLOW	1	18	
20	G451801-8	BOLT, 1/2 X 1.3/4 LG. FLANGE	1	15	

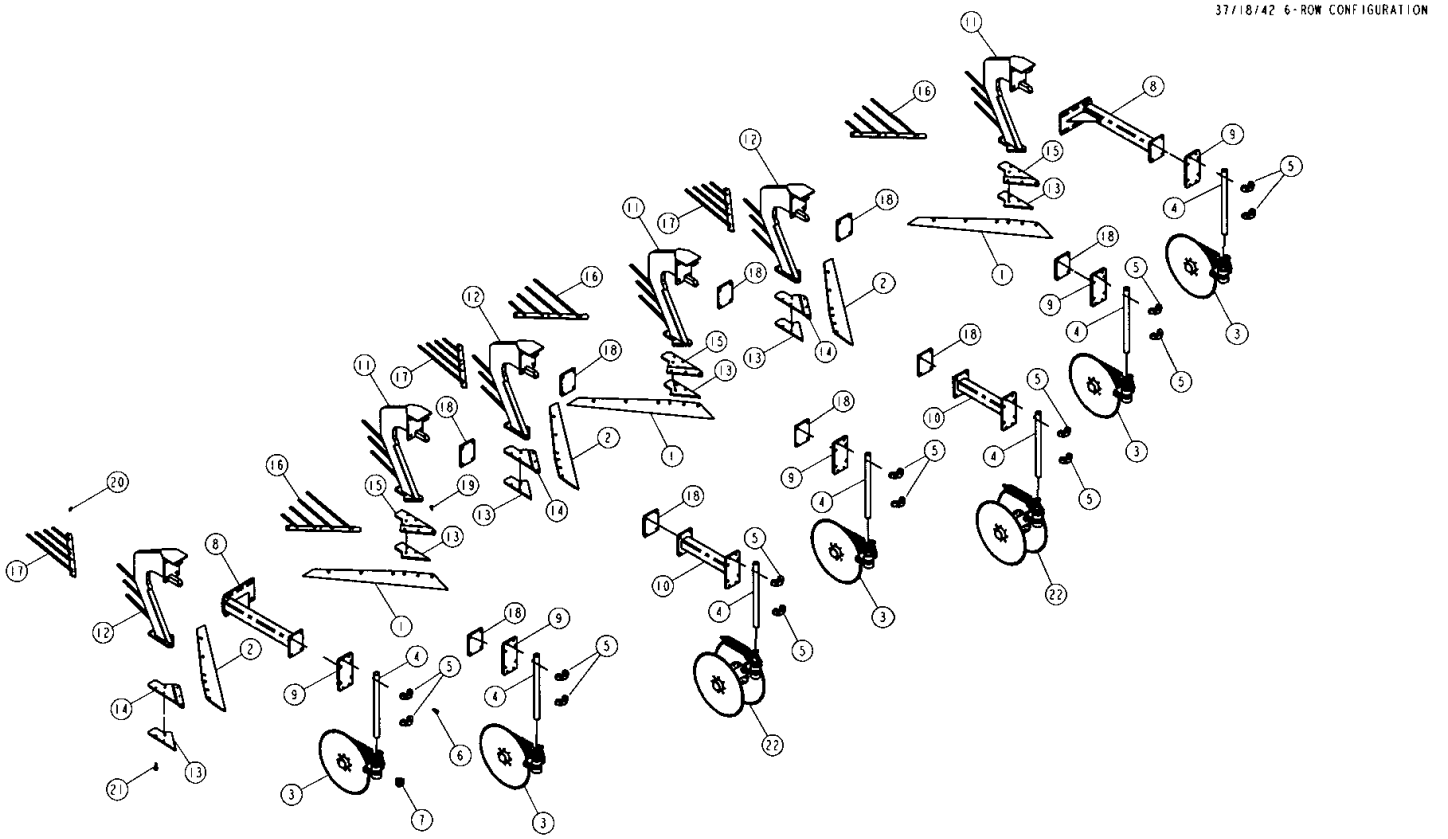

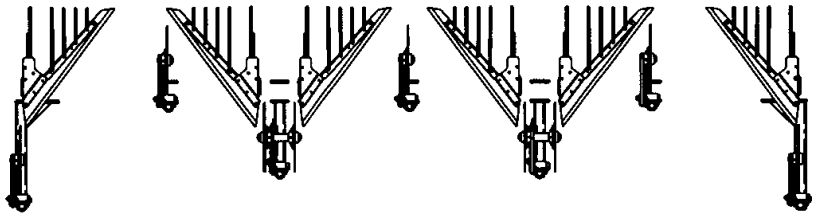

BOTTOM VIEW
SCALE 0.047

70695 PLOW/COULTER SETUP; 6-ROW

ITEM	PART NUMBER	DESCRIPTION	QTY SHOWN	QTY REQ'D	COMMENTS
1	61728	BLADE, DIGGER; OUTER LEFT	3		
2	61730	BLADE, DIGGER; OUTER RIGHT	3		
3	80464	ASSEMBLY, COULTER W/BLADE	5		
4	80499	SHANK, 22" LG. X 1.1/2	7		
5	80500	CLAMP, COULTER, 1.1/2	14		
6	80501	SETSCREW,1/2-13X1-1/2 SQ HEAD	1	21	
7	80502	COLLAR, "RIGID" COULTER	1	7	
8	93824	MOUNT, COULTER; OFFSET	2		
9	94002	MOUNT, YETTER COULTER	5		
10	94009	MOUNT, COULTER; STEPPED	2		
11	127399	MOUNT, OUTER BLADE; 2-ROW LEFT	3		
12	127400	MOUNT, OUTER BLADE; RIGHT	3		
13	127624	SUPPORT, 37/18/42	6		
14	127741	MOUNT, BLADE; LEFT; 18/37 DEG.	3		
15	127742	MOUNT, BLADE; RIGHT; 18/37 DEG.	3		
16	127744	GUIDE, RIGHT PLOW; 37/18/42	3		
17	127745	GUIDE, LEFT PLOW; 37/18/42	3		
18	93824C	PLATE, COULTER MOUNT	9		
19	G101536	BOLT, 3/8-16 X 1.1/4 PLOW	1	18	
20	G101637	BOLT, 3/8-16 X 1 PLOW	1	18	
21	G451801-8	BOLT, 1/2 X 1.3/4 LG. FLANGE	1	18	
22	S10859	ASSEMBLY, DUAL COULTER	2		

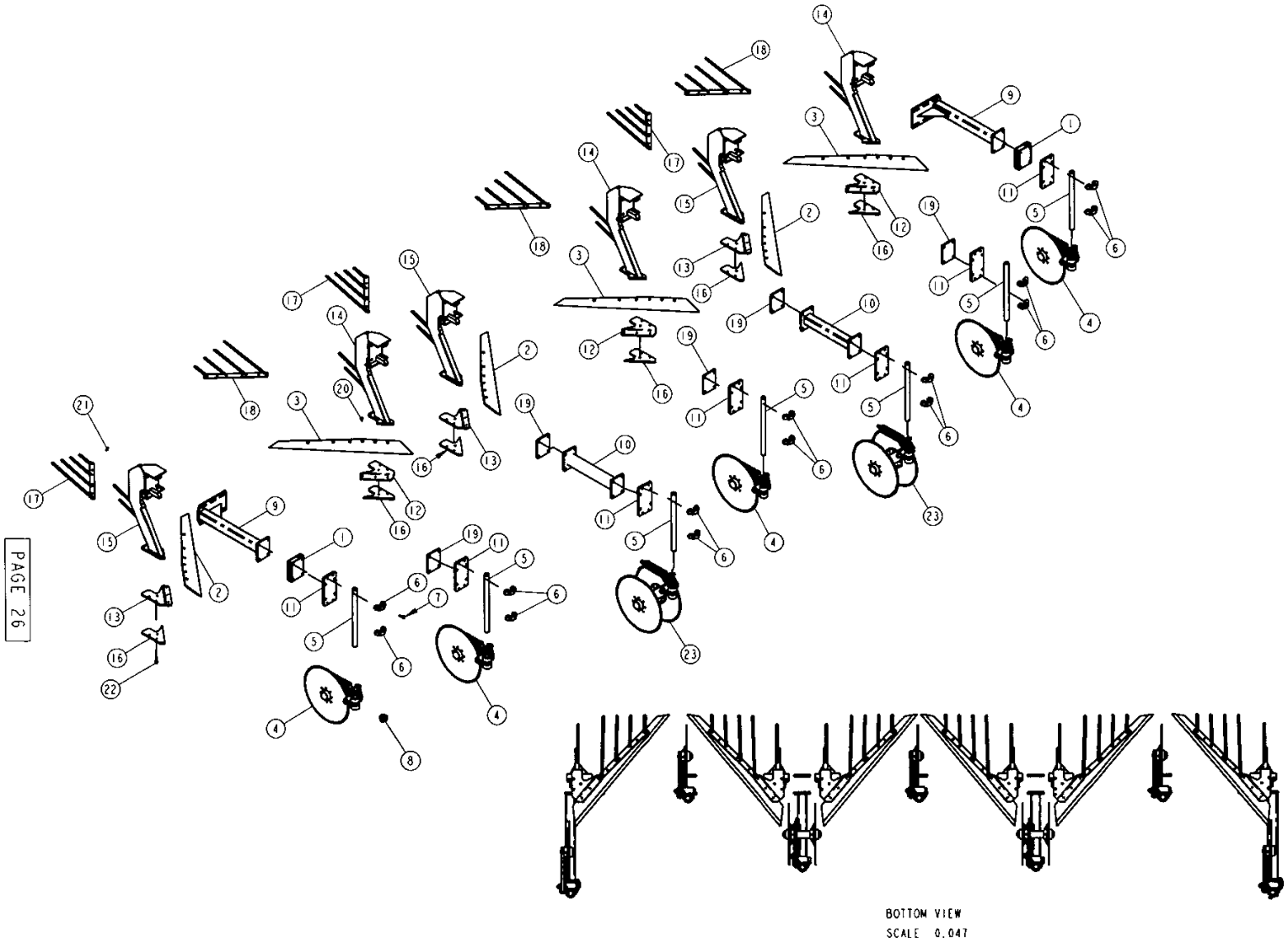

BOTTOM VIEW
SCALE 0.047

ITEM	PART NUMBER	DESCRIPTION	QTY SHOWN	QTY REQ'D	COMMENTS
1	20810	SPACER, OUTSIDE COULTER	2		
2	61777	BLADE, CENTER; RIGHT	3		
3	61778	BLADE, CENTER; LEFT	3		
4	80464	ASSEMBLY, COULTER W/BLADE	5		
5	80499	SHANK, 22" LG. X 1.1/2	7		
6	80500	CLAMP, COULTER, 1.1/2	14		
7	80501	SETSCREW,1/2-13X1-1/2 SQ HEAD	1	21	
8	80502	COLLAR, "RIGID" COULTER	1	7	
9	93824	MOUNT, COULTER; OFFSET	2		
10	93828	MOUNT, CENTERED COULTER; SHORT	2		
11	94002	MOUNT, YETTER COULTER	7		
12	127638	BASE, LEFT PLOW MOUNT; 40/20	3		
13	127639	BASE, RIGHT PLOW MOUNT; 40/20	3		
14	127640	MOUNT, OUTER BLADE; 2-ROW LEFT	3		
15	127641	MOUNT, OUTER BLADE; RIGHT	3		
16	127642	SUPPORT, 40/20/46	6		
17	127643	GUIDE, LEFT PLOW; 40/20/46	3		
18	127644	GUIDE, RIGHT PLOW; 40/20/46	3		
19	93824C	PLATE, COULTER MOUNT	5		
20	G101536	BOLT, 3/8-16 X 1.1/4 PLOW	1	18	
21	G101637	BOLT, 3/8-16 X 1 PLOW	1	18	
22	G451801-8	BOLT, 1/2 X 1.3/4 LG. FLANGE	1	18	
23	S10859	ASSEMBLY, DUAL COULTER	2		

AMADAS 6 Row Peanut Digger / Inverters

ADI-6 : Optional Blade and Coulter Configurations

ADI-6 Kit # 70694

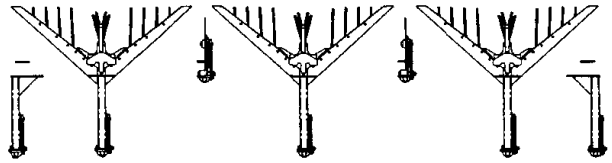

ADI-6 Kit # 70695

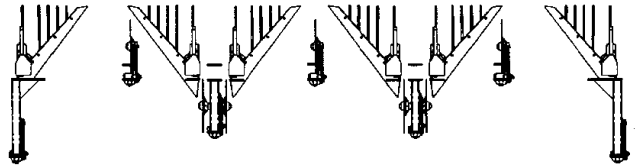

ADI-6 Kit # 70696

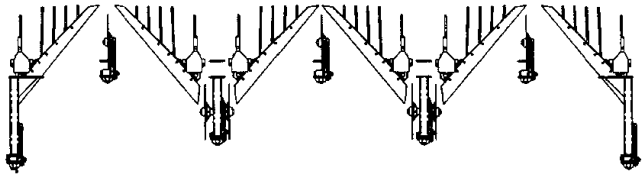

NOTE: When ordering a Peanut Digger / Inverter, you must specify one of the above optional Blade and Coulter configuration kits.

ONE-YEAR LIMITED WARRANTY
For AMADAS INDUSTRIES DIGGER / INVERTERS

A. General Provisions

The Warranties described below are provided by AMADAS INDUSTRIES ("AMADAS") through its authorized dealers to the original purchaser of each new AMADAS Digger / Inverter. AMADAS will repair or replace, at its option, any part covered under warranty which is found to be defective in material or workmanship during the applicable period of warranty. This warranty is applicable only to the cost of the part replaced or repaired and does not cover labor costs involved in installing the replaced or repaired defective part.

B. What is Warranted?

All parts of any new AMADAS Digger / Inverter are warranted for 12 months. The warranty period will begin when the Digger / Inverter is delivered to the purchaser. AMADAS will repair or replace, at its option, any new part or component under the above warranty, if a defect in material or workmanship appears in such part or component and is reported to AMADAS before the expiration of the applicable equipment warranty.

Used equipment is not warranted by AMADAS unless it is specifically covered by a separate warranty document. The above warranties cover only defective material and workmanship. The warranties do not cover any depreciation or failure caused by normal wear, lack of proper maintenance or use, misuse, lack of proper protection during storage, or accident. The purchaser shall pay all costs of routine maintenance and/or replacement of maintenance and wear items.

C. Unapproved Service or Modification

All Obligations of AMADAS under this warranty are terminated if the Digger / Inverter is modified or altered in ways not approved by AMADAS.

D. Securing Warranty Service

To secure warranty service, the purchaser must (1) report the product defect and request repair within the applicable warranty period, (2) present evidence of the date of delivery of the Digger / Inverter, and (3) make the Digger / Inverter available to an AMADAS authorized dealer within a reasonable period of time.

E. No Dealer Warranty

The selling dealer makes no warranty of his own on any item warranted by AMADAS, and makes no warranty on other items. The dealer has no authority to make any representation or promise on behalf of AMADAS, or to modify the terms or limitations of this warranty in any way.

F. What are your Responsibilities?

a. Read the operator's manual before operating the equipment.
b. Perform all necessary maintenance as described in the operator's manual.
c. Deliver the machine to an AMADAS authorized dealer at your expense during normal working hours for any needed warranty services.
d. Contact an AMADAS authorized dealer promptly on any claim for warranty service.
e. Sign the AMADAS machinery delivery form, which will be given to you by the dealer.

G. Disclaimer

There are no warranties that extend beyond the description here. **ANY WARRANTIES OF MERCHANTABILITY AND FITNESS FOR ANY PARTICULAR PURPOSE ARE SPECIFICALLY DISCLAIMED AS ARE ALL OTHER REPRESENTATIONS TO THE PURCHASER.** AMADAS specifically excludes any liability on behalf of the company for any incidental or consequential damages including, but not limited to, crop loss, loss of profits, rental of substitute equipment, or other commercial losses. AMADAS shall not be responsible for expenses or inconveniences that you might incur or experience with respect to the AMADAS Digger / Inverter nor shall AMADAS be liable for defects, damage, or failures caused by improper storage, unreasonable use, or abuse, or accident, including the failure to provide reasonable and specified maintenance. This warranty applies only to the original purchaser of the equipment. Because some states do not allow the exclusion of limitations of incidental or consequential damages, the above limitation may not apply to you. This warranty gives you specific legal rights. You may also have other rights, which vary from state to state. Where there is a conflict between a provision of this warranty and the provision of any state, the state legislation prevails.

AMADAS