June 15, 2009

ADI-836PTF
8-ROW PULL TYPE FOLDING
DIGGER/INVERTER

CAT407 1st Edition

Beginning Serial # 470000

Owner's Name

Dealer's Name _____

Serial Number _____ **Model No.** _____

Date Purchased _____

TABLE OF CONTENTS

CAT407
1st Edition
June 15, 2009

ADI-836PTF
8-ROW PULL TYPE
FOLDING DIGGER/INVERTER

(Beginning Serial # 470000)

Description	Page
ADI-836 Pull type Folding Digger	3
ADI-836 PTF Center Frame	5
836PTF-Center Left (S128946-1) Conveyor Section	7
0337 - Belt Connecting Kit - 70808	9
0339 - 80523 Rod Replacement Kit - 70805 - 36" Digger	11
ADI-836 Pull Type Generic Drive	13
ADI-836 Pull Type Folding Inverters - 71144	15
8-Row 36" Twin "V" Inverter Kit - 71125	17
Solid "V" Inverter Rotor; 36"	19
S15465-1 Speed Indicator	21
71129 - ADI-836PTF 45/18 Plow Kit	23
71097 - ADI-836PTF 45/18 Center Plow Kit	25
71130 - ADI-836PTF 45/23 Plow Kit	27
71128 - ADI-836PTF 45/23 Center Plow Kit	29
71118 - ADI-836PTF 37/18 Plow Kit	31
71122 - ADI-836PTF 37/18 Center Plow Kit	33
71120 - ADI-836PTF 40/20 Plow Kit	35
71123 - ADI-836PTF 40/20 Center Plow Kit	37
8-Row Pull Type Digger Tongue	39
8-Row & 12-row PT Digger Tongue Hydraulics	41
ADI-836PTF Hydraulics	43
ADI-836PTF Right Linkage	45
ADI-836PTF Left Linkage	47
ADI-236 PT Right Frame	49
ADI-236 PT Right Conveyor	51
ADI-236 PT Right Generic Drive	53
71071 - 2-Row 36" Twin "V" Inverter; Right	55
236 PT Right Plow/Coulter Kits	57
ADI-236 PT Left Frame	59
ADI-236 PT Left Conveyor	61
ADI-236 PT Left Generic Drive	63
71071 - 2 Row 36" Twin "V" Inverter; Left	65
236 PT Left Plow/Coulter Kits	67
ADI-8-Row Pull Type Decals	69
Numerical Parts Index	70
Warranty	

NOTES

The Terms "Left" and "Right" used in the description of parts are determined by facing the direction of travel of the machine.

"A/R" found in the "No. Req'd" column denotes "As Required".
"OPT" found in the "No. Req'd" column denotes "Optional".

1100 Holland Rd. / P.O. Box 1833 Suffolk, VA 23434
(757) 539-0231 / Fax - (757) 934-3264

1701 S. Slappey Blvd./P.O. Box 3687 Albany, GA 31706
(229) 439-2217 / Fax (229) 439-9343

AMADAS

1
2

ADI-836 PULL TYPE FOLDING DIGGER

ITEM	PART NUMBER	DESCRIPTION	QTY SHOWN	QTY REQ'D	COMMENTS
1	EADI-236PT-RT	WING, ADI-236 LEFT	1		
2	EADI-236PT-LFT	WING, ADI-236 RIGHT	1		

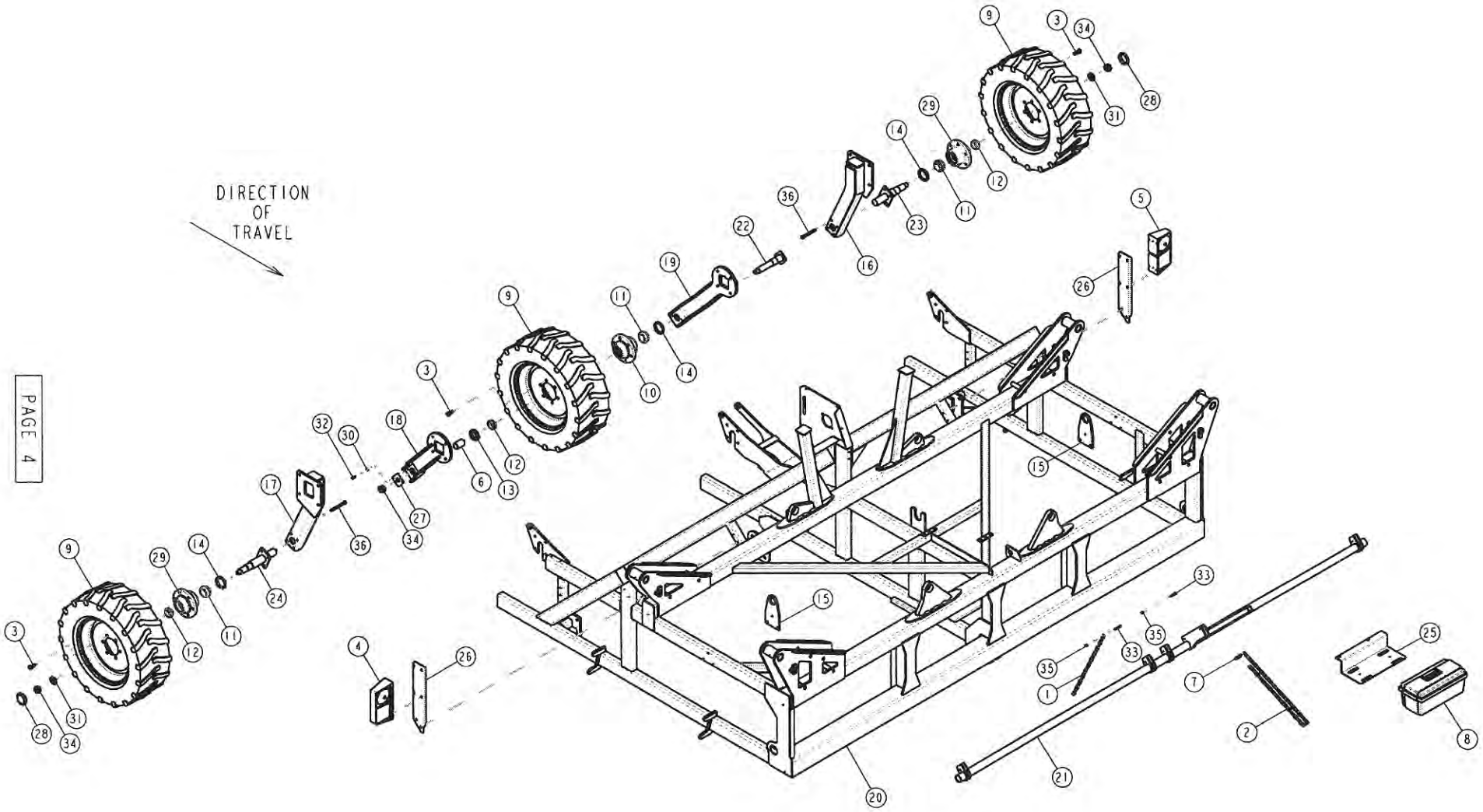
DIRECTION
OF
TRAVEL

ADI-836 PTF CENTER FRAME

ITEM	PART NUMBER	DESCRIPTION	QTY SHOWN	QTY REQ'D	COMMENTS
1	4293-21	CHAIN,3/16 COIL; 21 LINKS	1	4	
2	4293-39	CHAIN,3/16 COIL; 39 LINKS	1		
3	8017	BOLT, LUG; 9/16-18X1-11/16	3	18	
4	15929	LIGHT, DUAL LAMP W/BRAKE FCN; LH	1		
5	15930	LIGHT, DUAL LAMP W/BRAKE FCN; RH	1		
6	21026	SPACER, 2-1/2 LG.	1		
7	80458	SNAP, SPRING; 1/4"	1		
8	80460	TOOLBOX, RUBBERMAID DURA-BULL	1		
9	80729	ASSEMBLY, TIRE/WHEEL, 280/60 - 15.5 LEFT	3		
10	80750	Hub, 6on6;4-5/8 BC;3250#	1		
11	80751	BEARING, 1-3/8; 14137A	3		
12	80752	BEARING, 1-3/8; 14137A	3		
13	80753	SEAL, DOUBLE LIP 1-3/4" ID	1		
14	80754	SEAL, DOUBLE LIP 1-3/4" ID	3		
15	93819	MOUNT, CONVEYOR LIFT	2		
16	94943	MOUNT, OUTER WHEEL; DIGGER	1		
17	94947	MOUNT, OUTER WHEEL; DIGGER	1		
18	94948	MOUNT, DIGGER WHEEL; RT	1		
19	94949	MOUNT, DIGGER WHEEL; LFT	1		
20	94954	FRAME, ADI-836PTF	1		
21	94955	LIFT, 836PT FOLDING; CENTER	1		
22	100047	SPINDLE, CENTER WHEEL; PT DIGGER	1		
23	100050	SPINDLE, PT DIGGER OUTER LEFT	1		
24	100051	SPINDLE, PT DIGGER OUTER RT	1		
25	127436	MOUNT, TOOLBOX	1		
26	128996	MOUNT, LIGHT	2		
27	129228	PLATE, WHEEL MOUNT	1		
28	80750A	CAP, HUB	2		
29	80750INC	Hub, 6 on 6; 4-5/8 BC; 3230#	2		
30	G120214	LOCKWASHER, 5/16	1	2	
31	G131019	WASHER, 1" SAE FLAT	2		
32	G180077	SCREW, 5/16-18 X 3/4 USS CAP	1	2	
33	G180085	SCREW, 5/16-18 X 1-3/4 USS CAP	2	6	
34	G272324	NUT, 1-14 SAE HEX CASTLE	3		
35	G431798	LOCKNUT, 5/16-18 USS NYLOCK HEX	2	6	
36	G433156	SCREW, 1/2-13 X 4-1/2 USS CAP	2		

ALSO USED BUT NOT SHOWN		
16409	HARNESS, WIRING; DIGGER LIGHTS	1
14936	TIE, 8" PUSH MNT BLACK; BARBED TIP	20

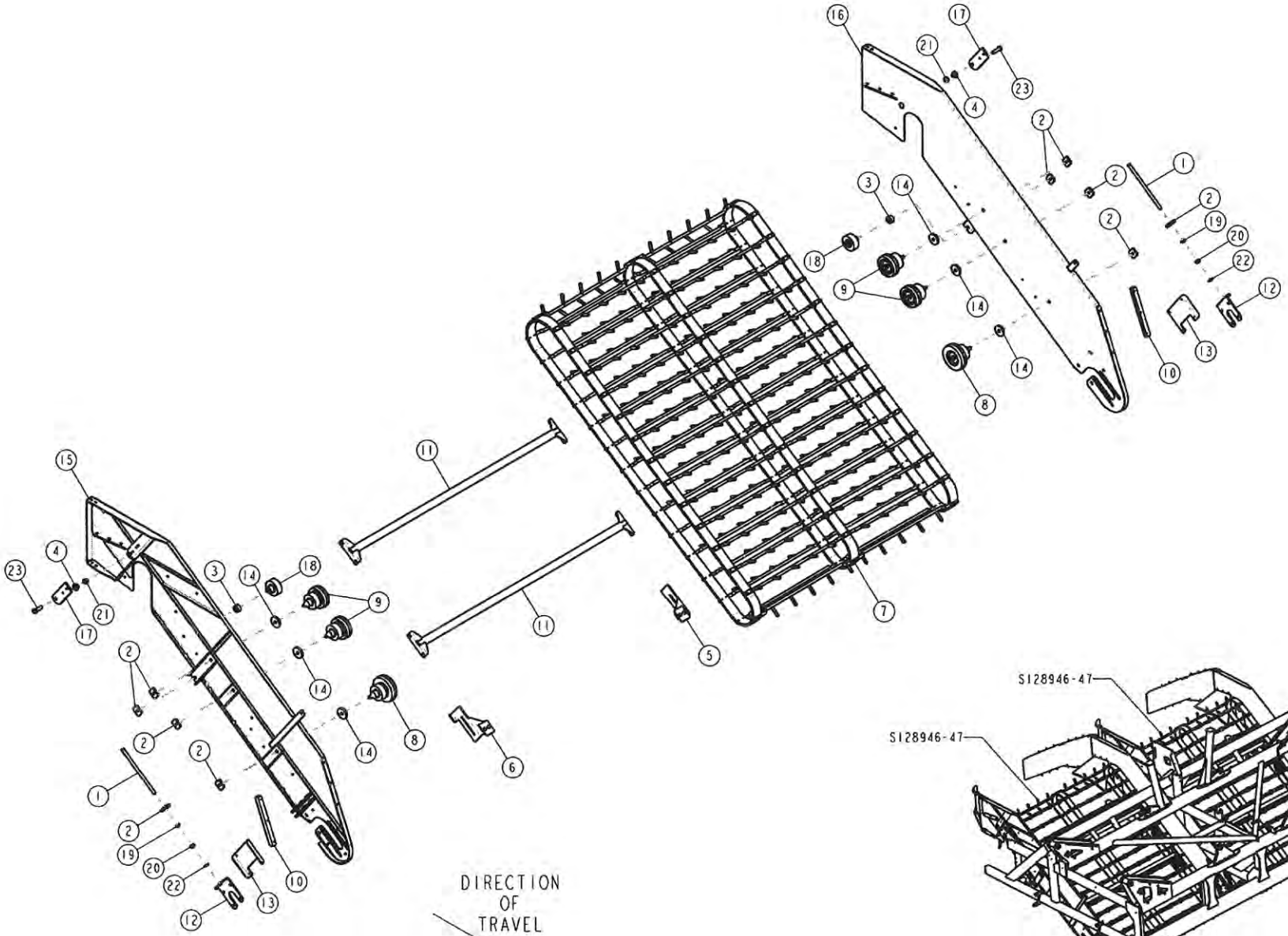

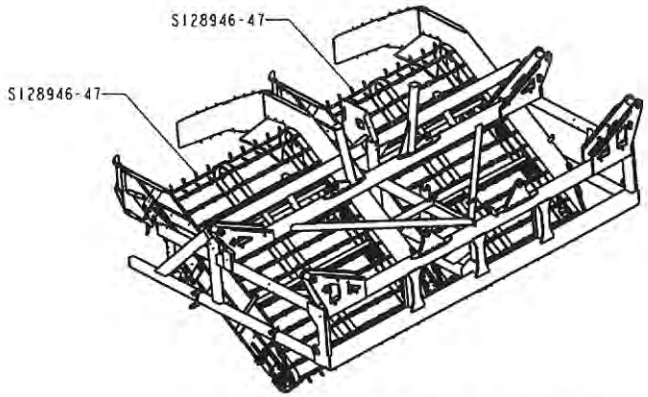

ADI-836PTF CENTER SECTION
SCALE 0.031

836PT - CENTER LEFT [S128946-1] CONVEYOR SECTION

ITEM	PART NUMBER	DESCRIPTION	QTY SHOWN	QTY REQ'D	COMMENTS
1	1841	ROD, ADJUSTING; BEARING	2		
2	2020	NUT, 5/8-11,2X1-3/4 IDLER ADJ	10		
3	20830	SPACER, 1.50 OD X .671 ID X .75 LONG	2		
4	51692	BUSHING, CONVEYOR PIVOT	2		
5	70829	SCRAPER, LFT FRONT IDLER	1		
6	70830	SCRAPER, RT FRONT IDLER	1		
7	80523	CONVEYOR, BELT & BAR; 62.17/32 WIDE	1		
8	80530	ROLLER, SHAKER; 6"	2		
9	80531	SHAKER, ROLLER; 5"	4		
10	80728	BUMPER, DIGGER SIDE	2		
11	94240	BRACE, CROSS; 36" DIGGER	2		
12	127897	BRACKET, DIGGER SIDE	2		
13	127972	PLATE, REINFORCEMENT	2		
14	127995	SPACER, SHAKER IDLER	6		
15	128946	SIDE, RIGHT NARROW	1		
16	128947	SIDE, LEFT NARROW	1		
17	128948	GUIDE, CONV.SIDE; STRAIGHT	2		
18	80531B	ROLLER, 3.5"	2		
19	G120240	NUT, 5/8-11 USS JAM	2		
20	G124589	NUT, 5/8-11 USS	2		
21	G124590	LOCKNUT, 5/8-11 NYLOCK	2		
22	G131016	WASHER, 5/8 SAE FLAT	2		
23	G271723	SCREW, 5/8-11 X 2 USS CAP	2		

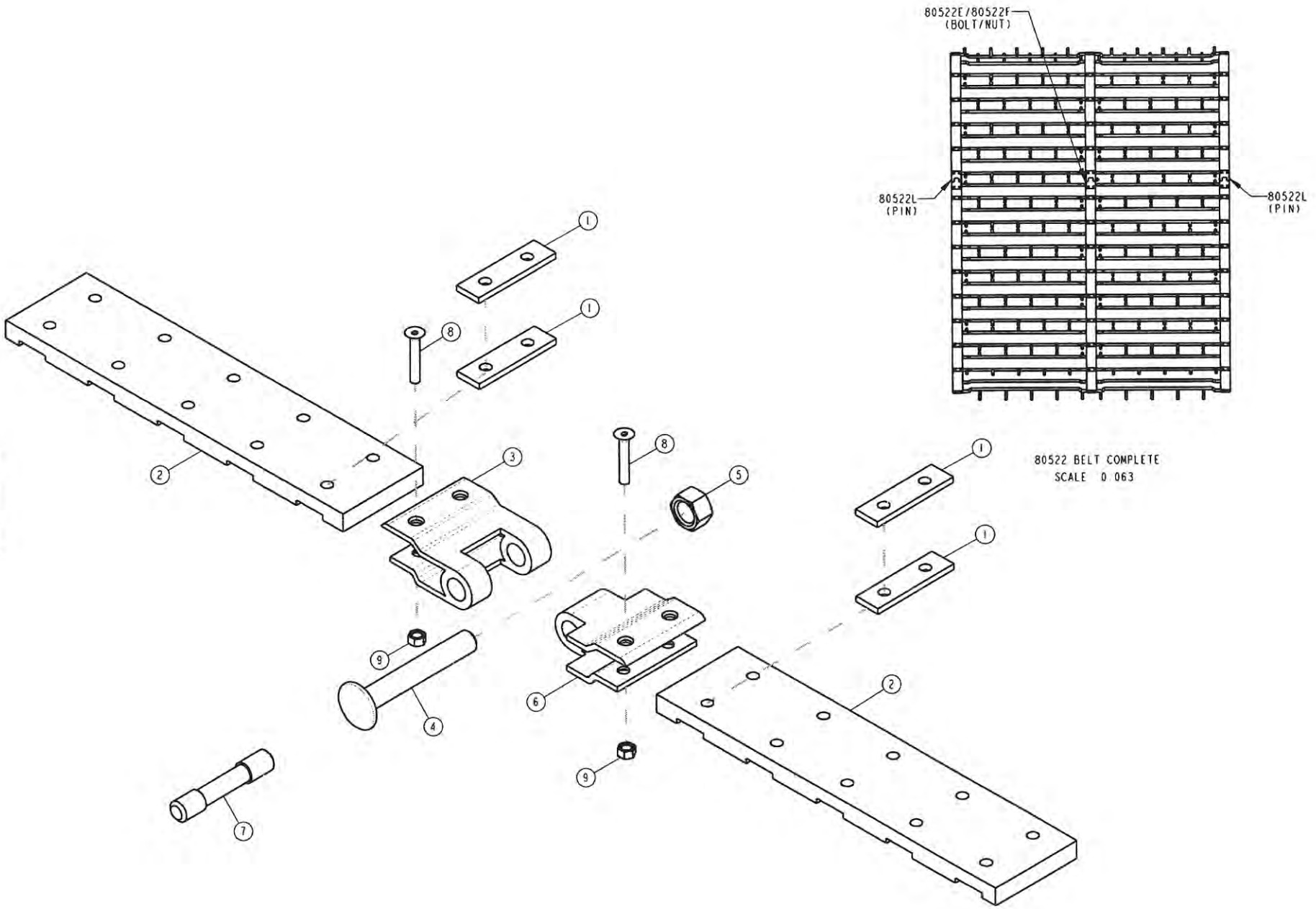
80522E/80522F
(BOLT/NUT)
80522L
(PIN)
80522L
(PIN)
80522 BELT COMPLETE
SCALE 0 063
1
2
3
4
5
6
7
8
9

ITEM	PART NUMBER	DESCRIPTION	QTY SHOWN	QTY REQ'D	COMMENTS
1	21025	SPACER, BELT CONNECTING KIT	4		
2	80522	BELT, SECTION; SHOWN AS REPRESENTATION ONLY!	2		--SEE NOTE 1--
3	80522C	CLIP, BELT CONNECTING;FEMALE	1		
4	80522E	BOLT, M12X75	1		*USE ONLY ON CENTER BELT SECTION.
5	80522F	NUT, M12	1		*USE ONLY ON CENTER BELT SECTION.
6	80522K	CLIP, BELT CONNECTING;MALE	1		
7	80522L	PIN, 11.8MM BELT CONNECTING	1		*USE ONLY ON OUTER BELT SECTIONS.
8	80522M	BOLT,10-32 BELT CLIP	2	4	
9	80522N	NUT,10-32 BELT CLIP	2	4	

--NOTE 1--	
80522	38" & 40" DIGGER SPACING
80523	36" DIGGER SPACING
80573	30" DIGGER SPACING

4
3
3
1
2

0339 - 80523 ROD REPLACEMENT - KIT 70805 - 36" DIGGER

ITEM	PART NUMBER	DESCRIPTION	QTY SHOWN	QTY REQ'D	COMMENTS
1	80523	BELT, SECTION	1		
2	80522G	PLATE, FLOW DRILL	1	6	
3	80522H	BOLT, M6X25 FLOW DRILL	2	12	
4	80523A	ROD, 63" BELT & BAR "A"	1		*80523B - 63" BELT & BAR "B"

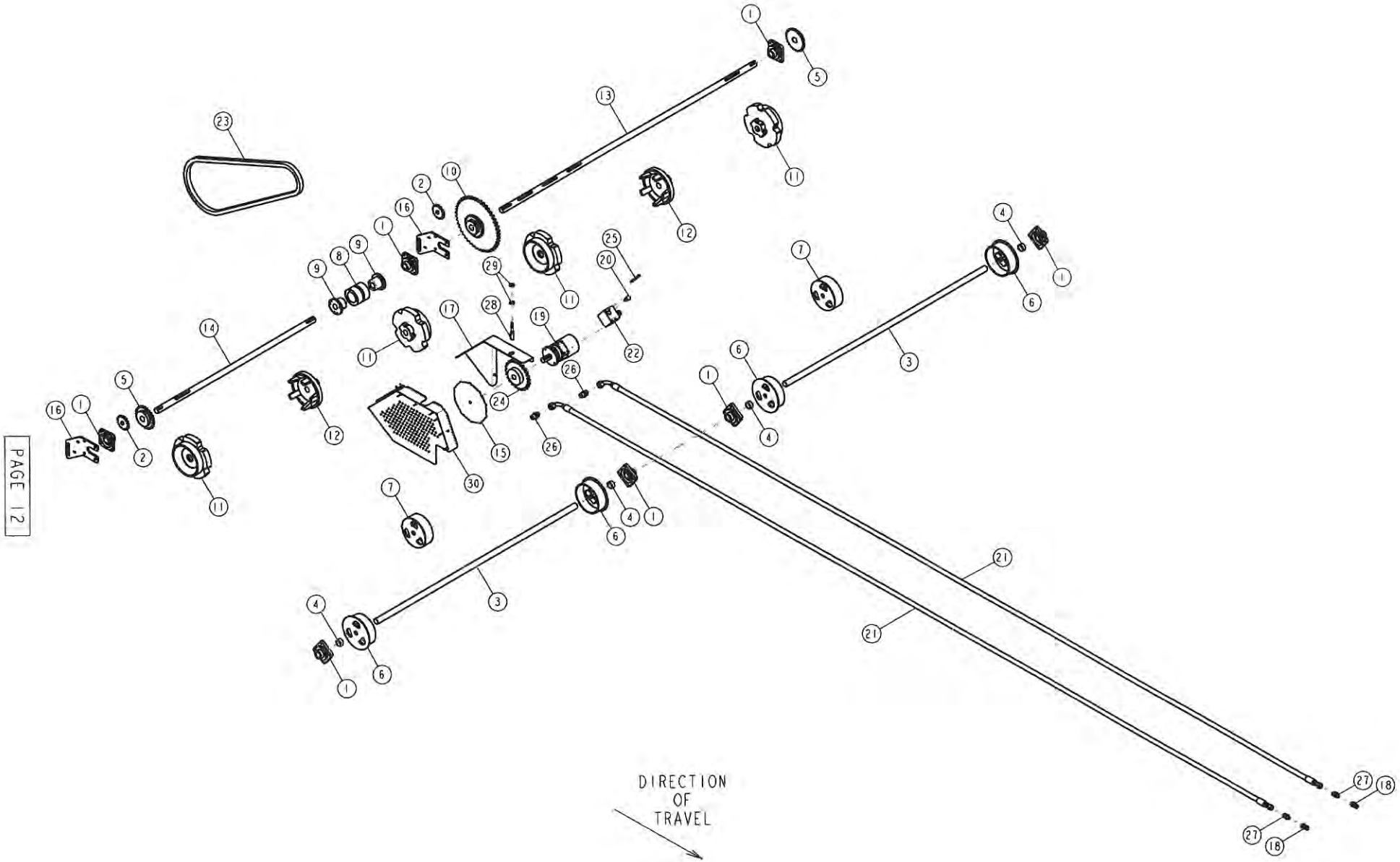
DIRECTION
OF
TRAVEL

ADI-836 PULL TYPE GENERIC DRIVE

ITEM	PART NUMBER	DESCRIPTION	QTY SHOWN	QTY REQ'D	COMMENTS
1	3253	BEARING, 1.7/16" 4-H; TRIPLE LIP	7		
2	5122	IDLER, NO.60 CHAIN SPROCKET	2		
3	10936	SHAFT, IDLER; 36" DIGGER	2		
4	20957	BUSHING,DIGGER IDLER	4		
5	51079	SPROCKET, 60B24 F1-7/16; 2 SETSCREWS	2		
6	51661	IDLER, 2-PIECE FLANGED	4		
7	51663	IDLER, 2-PIECE NON-FLANGED	2		
8	51691	COUPLER,CSQ,QI BUSHING	1		
9	51695	BUSHING, QI 1-7/16	2		
10	51787	SPROCKET, 80-45/60-24 DS	1		
11	80525	SPROCKET, SP150 URETHANE 1-7/16 BORE	4		
12	80641	IDLER, CAST SPLIT	2		
13	100054	SHAFT, DIGGER DRIVE 836-PTF CNT	1		
14	100055	SHAFT, DIGGER DRIVE; 836PTF SIDES	1		
15	128006	DISC, SPEED INDICATOR; 11-3/8 DIA.	1		
16	128949	PLATE, IDLER BRACKET	2		
17	128964	SHIELD, CENTER DRIVE; BACK	1		
18	140341	COUPLER,8 ORBF-1/2 QDM	2		
19	140641	MOTOR, HYD.; 18.3 CU. IN. W/MANIFOLD MT.	1		
20	140672	VALVE, CHECK	1	A/R	
21	140916	HOSE, HYD; 3/4 X 240	2		
22	140927	MANIFOLD, WITH CV103P CARTRIDGE	1		
23	4365D-101	CHAIN,#80, 99 PITCHES + CONN + OFFSET	1		
24	80B24-1-4	SPROCKET, 80B24;F1.1/4; 2 SETSCREWS	1		
25	G11500721	SCREW, M8 X 100MM X 1.25 PITCH SOCKET HEAD	1	4	
26	J38H1163	ADAPTER,12 ORB X 12 ORF	4		
27	J38H1317	HYDF, -10 ORS TO -8 ORB STRT	2		
28	JAH116104	SENSOR, SHAFT SPEED (40-47)	1		
29	JH104418	NUT, SENSOR FOR TRANSMISSION	2		
30	S128989	SHIELD, CENTER	1		

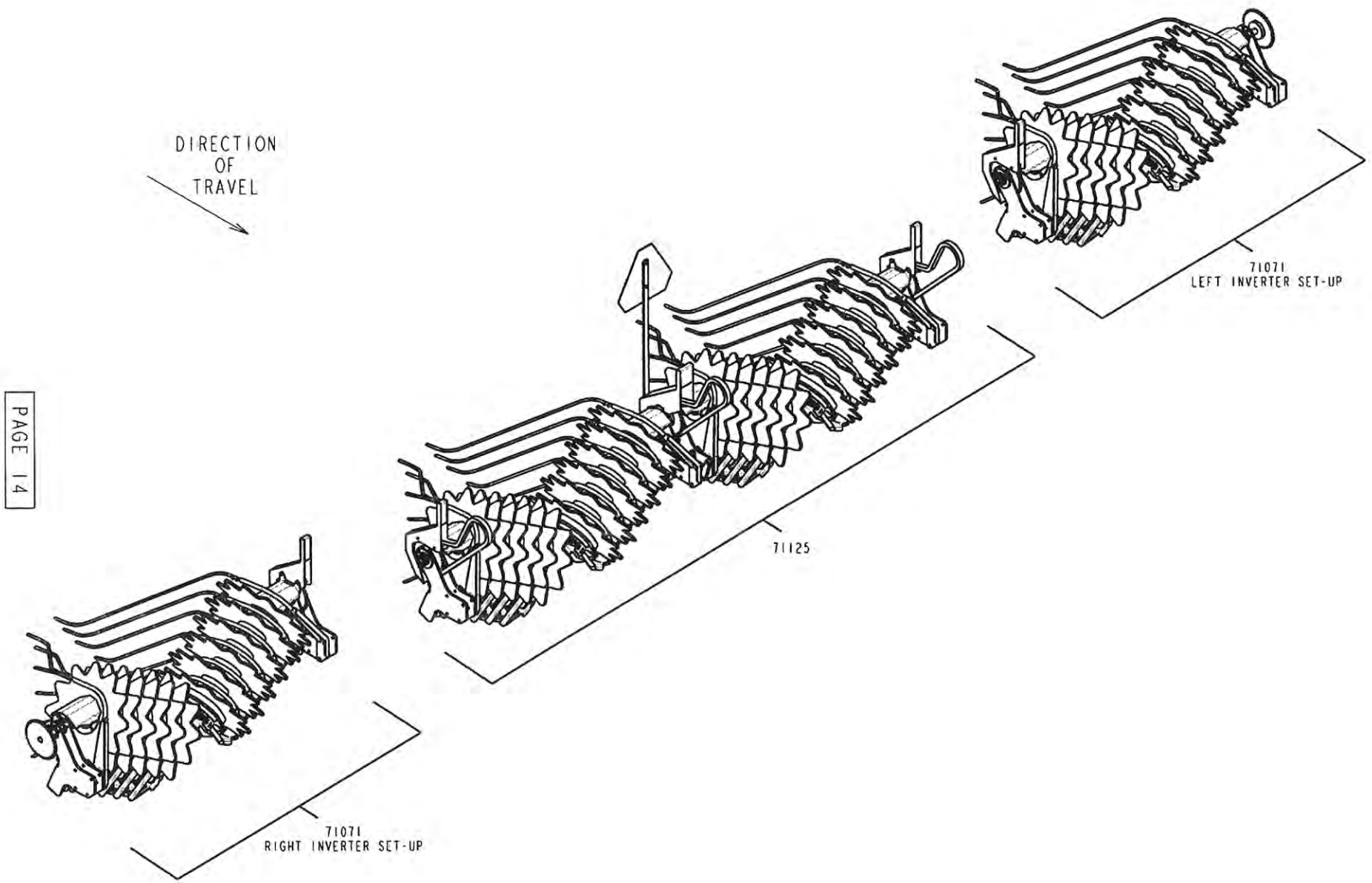
DIRECTION
OF
TRAVEL
71071
LEFT INVERTER SET-UP
71125
71071
RIGHT INVERTER SET-UP

ITEM	PART NUMBER	DESCRIPTION	QTY SHOWN	QTY REQ'D	COMMENTS

THIS PAGE INTENTIONALLY LEFT BLANK

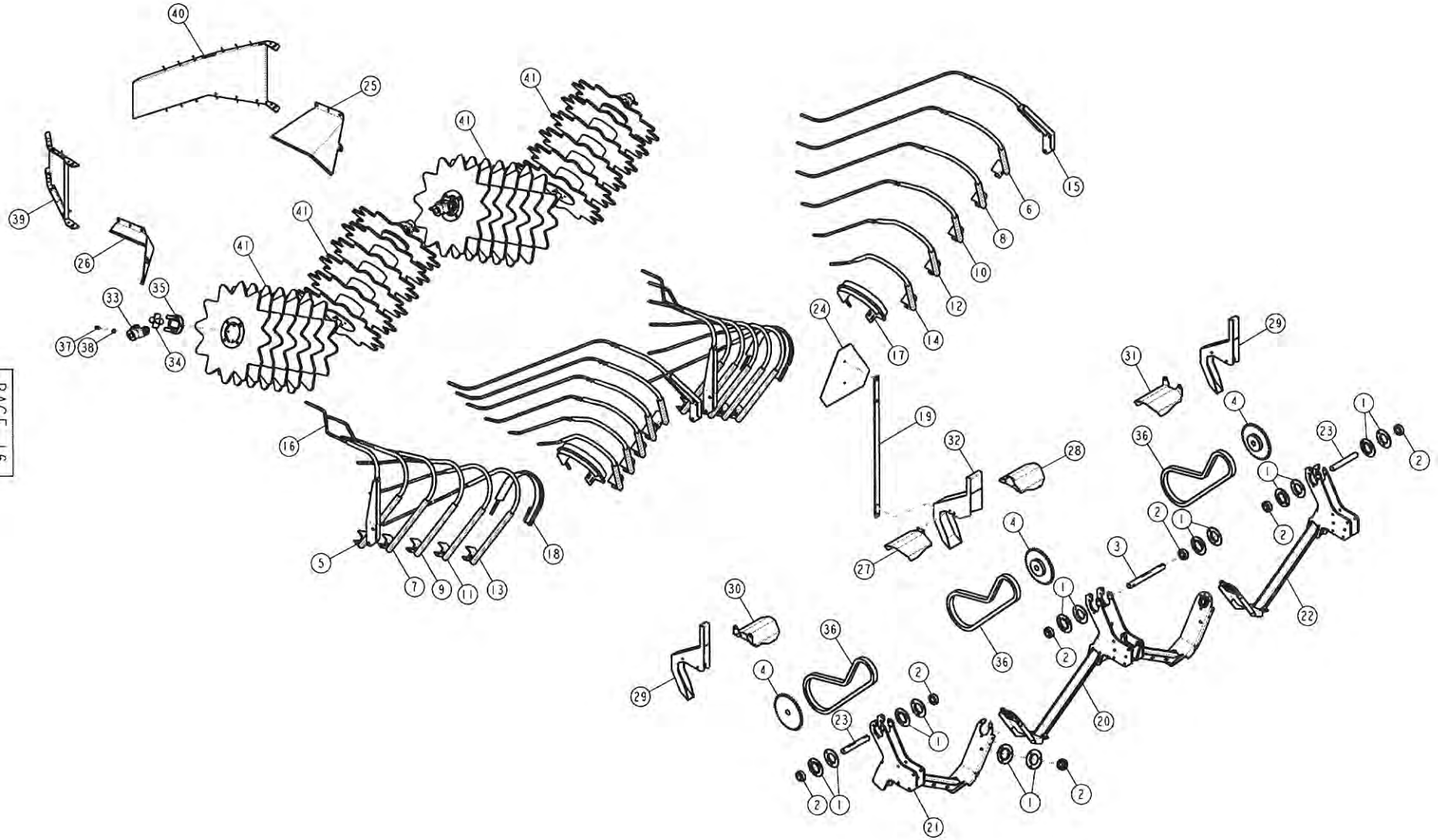
40
25
41
41
41
41
39
26
35
33
37
38
34
16
5
7
9
11
13
18
15
6
8
10
12
14
17
24
19
32
28
27
31
29
4
36
23
1
2
3
22
20
21
30
29
36
4
23
2
1
2
1
1
2
1
2
1
2

71125 TWIN V INVERTER KIT

ITEM	PART NUMBER	DESCRIPTION	QTY SHOWN	QTY REQ'D	COMMENTS
1	3093	FLANGETTE, 62MS FOR 1.3/16 BEARING	20		
2	3096	INSERT, 1.3/16 REPLACEMENT BEARING	10		
3	10950	SHAFT, V INVERTER CENTER	1		
4	51002	SPROCKET, 60B36 F1-3/16	3		
5	61949	ROD, INVERTER; #2 RIGHT "V"	2		
6	61950	ROD, INVERTER; #2 LEFT "V"	2		
7	61951	ROD, INVERTER; #3 RIGHT "V"	2		
8	61952	ROD, INVERTER; #3 LEFT "V"	2		
9	61953	ROD, INVERTER; #4 RIGHT "V"	2		
10	61954	ROD, INVERTER; #4 LEFT "V"	2		
11	61955	ROD, INVERTER; #5 RIGHT "V"	2		
12	61956	ROD, INVERTER; #5 LEFT "V"	2		
13	61957	ROD, INVERTER; #6 RIGHT "V"	2		
14	61958	ROD, INVERTER; #6 LEFT "V"	2		
15	62037	ROD, #1 INVERTER; LEFT "V"	2		
16	62038	ROD, #1 INVERTER; RIGHT "V"	2		
17	62099	ROD, INNER; RIGHT W/SHIELD	2		
18	62100	ROD, INNER; LEFT W/SHIELD	2		
19	62362	FLAT, SMV MOUNT	1		
20	94481	MOUNT, INVERTER ROD; V-36	1		
21	94484	MOUNT, INVERTER; 36 RIGHT	1		
22	94485	MOUNT, INVERTER; 36 LEFT	1		
23	100030	SHAFT, V INVERTER	2		
24	121106	DECAL, SMV W/METAL BACKING PLATE	1		
25	128137	SHIELD, LFT VINE DEFLECTOR	1	2	
26	128138	SHIELD, RT VINE DEFLECTOR	1	2	
27	128168	SHIELD, U-JOINT; INNER LEFT	1		
28	128169	SHIELD, U-JOINT; INNER RIGHT	1		
29	129004	SHIELD, INVERTER DRIVE; NARROW	2		
30	129005	SHIELD, U-JOINT, OUTER RIGHT	1		
31	129006	SHIELD, U-JOINT; NARROW LFT	1		
32	129202	SHIELD, INVERTER DRIVE; MIDDLE	1		
33	11377A	YOKE, 1-3/16 BORE X 3.25 LENGTH	4		
34	11377B	SPIDER, 1-1/4 X 3-7/32 OA	4		
35	11377C	YOKE, 4-3/8 FLANGE	4		
36	4043D-84	CHAIN, #60,83PITS+CONN	3		
37	G139454	SETSCREW, 7/16-14 X 1 LG.;SQ. HEAD	4		
38	G271509	NUT, 7/16-14 USS JAM	4		
39	S128152	FENDER,RIGHT	1	2	
40	S128153	FENDER; LEFT	1	2	
41	S94455	ASSEMBLY, SOLID "V" INV. ROTOR; 36"	4		

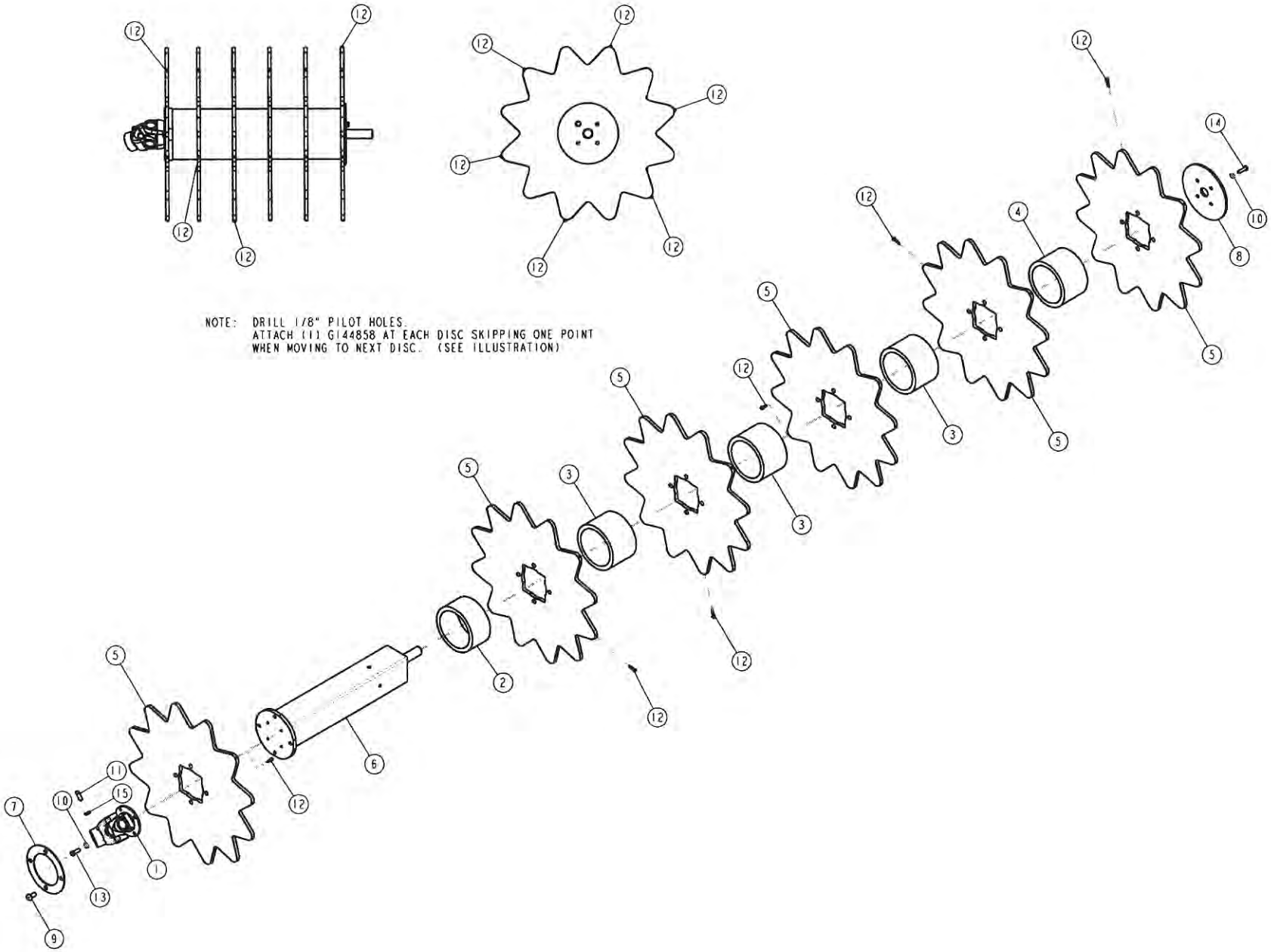
NOTE: DRILL 1/8" PILOT HOLES.
ATTACH (1) G144858 AT EACH DISC SKIPPING ONE POINT
WHEN MOVING TO NEXT DISC. (SEE ILLUSTRATION)

SOLID "V" INVERTER ROTOR; 36"

ITEM	PART NUMBER	DESCRIPTION	QTY SHOWN	QTY REQ'D	COMMENTS
1	11377	U-JOINT, 1-3/14 4 BOLT FLANGE	1		
2	20937	SPACER, 3-17/64; INVERTER ROTOR	1		
3	20938	SPACER, 4-9/32; INVERTER ROTOR	3		
4	20939	SPACER, 4-11/32; INVERTER ROTOR	1		
5	80498	DISC, URETHANE; 23.1/2" DIA.	6		
6	94455	ROTOR, "V" TUBE INVERTER; 36"	1		
7	128303	PLATE, ROTOR FLANGE	1		
8	128304	CAP, INVERTOR ROTOR	1		
9	G102924	SCREW, 1/2-13 X 1 BUTTON SOCKET CAP	4		
10	G120382	LOCKWASHER, 3/8	8		
11	G139454	SETSCREW, 7/16-14 X 1 LG.;SQ. HEAD	1		
12	G144858	SCREW, #14 X 1 ZINC PLATED HEX WASHER HEAD SELF-DRILLING	6		
13	G180122	SCREW, 3/8-16X1 USS CAP	4		
14	G180124	SCREW, 3/8-16 X 1-1/4 USS CAP	4		
15	G271509	NUT, 7/16-14 USS JAM	1		

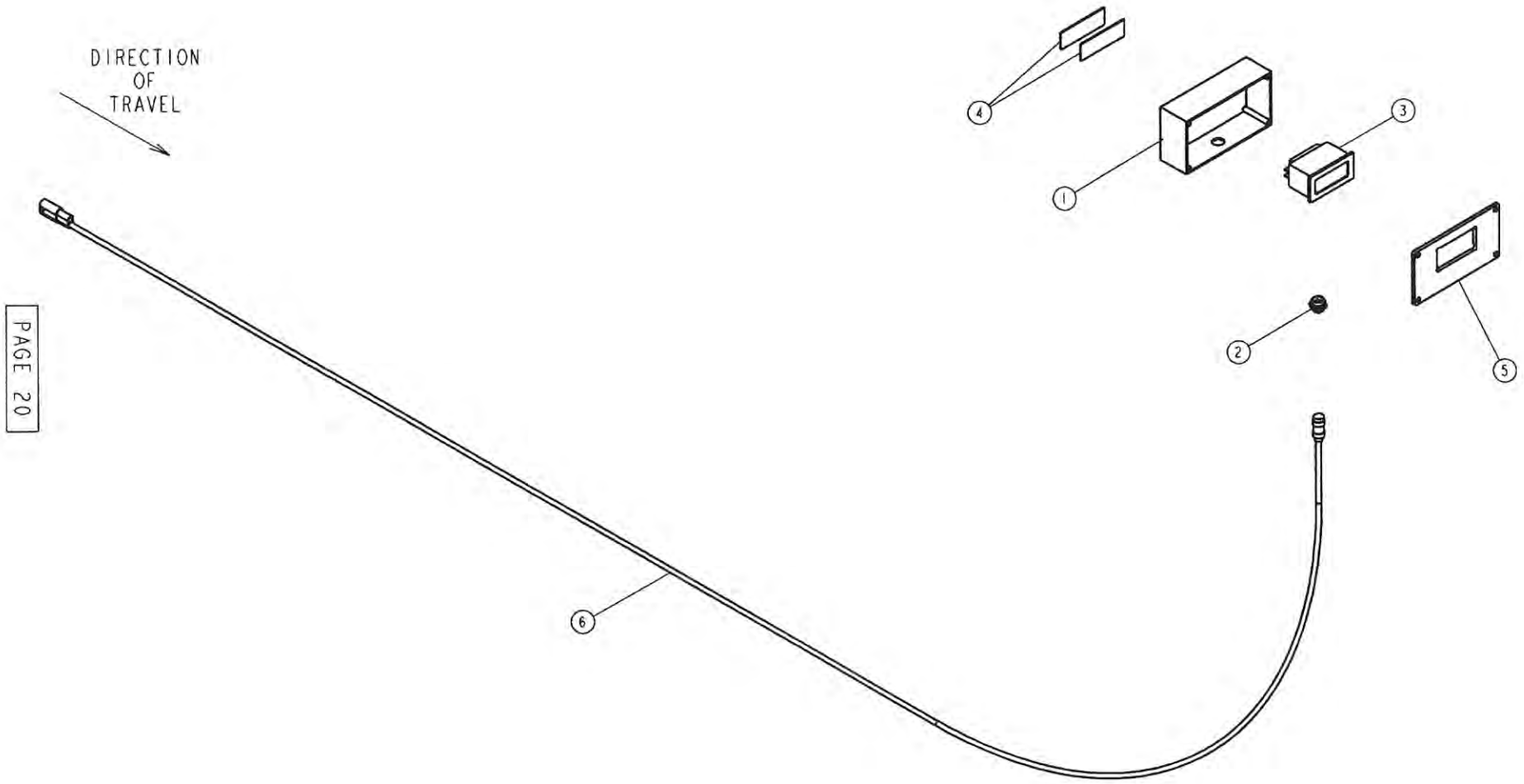
DIRECTION
OF
TRAVEL
1
2
3
4
5
6

S15465-1 SPEED INDICATOR

ITEM	PART NUMBER	DESCRIPTION	QTY SHOWN	QTY REQ'D	COMMENTS
1	15465	BOX, PLASTIC JUNCTION W/1 HOLE	1		
2	15468	SOCKET, 4 PIN CHASSIS MOUNT	1		
3	16395	TACHOMETER, OEMAK001	1		
4	80408	VELCRO, HOOK & LOOP, 1" WIDE	1	.25'	
5	15464C	COVER, PLASTIC JUNCTION BOX; W/HOLE	1		
6	S15569-24	CABLE, SPEED INDICATOR; 24 FT.	1		S15569-30 (836/840)

Note: Speed Indicator Cable Not Included in S15465-1

DIRECTION
OF
TRAVEL
71069
LEFT PLOW SET-UP
71097
71069
RIGHT PLOW SET-UP

ITEM	PART NUMBER	DESCRIPTION	QTY SHOWN	QTY REQ'D	COMMENTS

THIS PAGE INTENTIONALLY LEFT BLANK

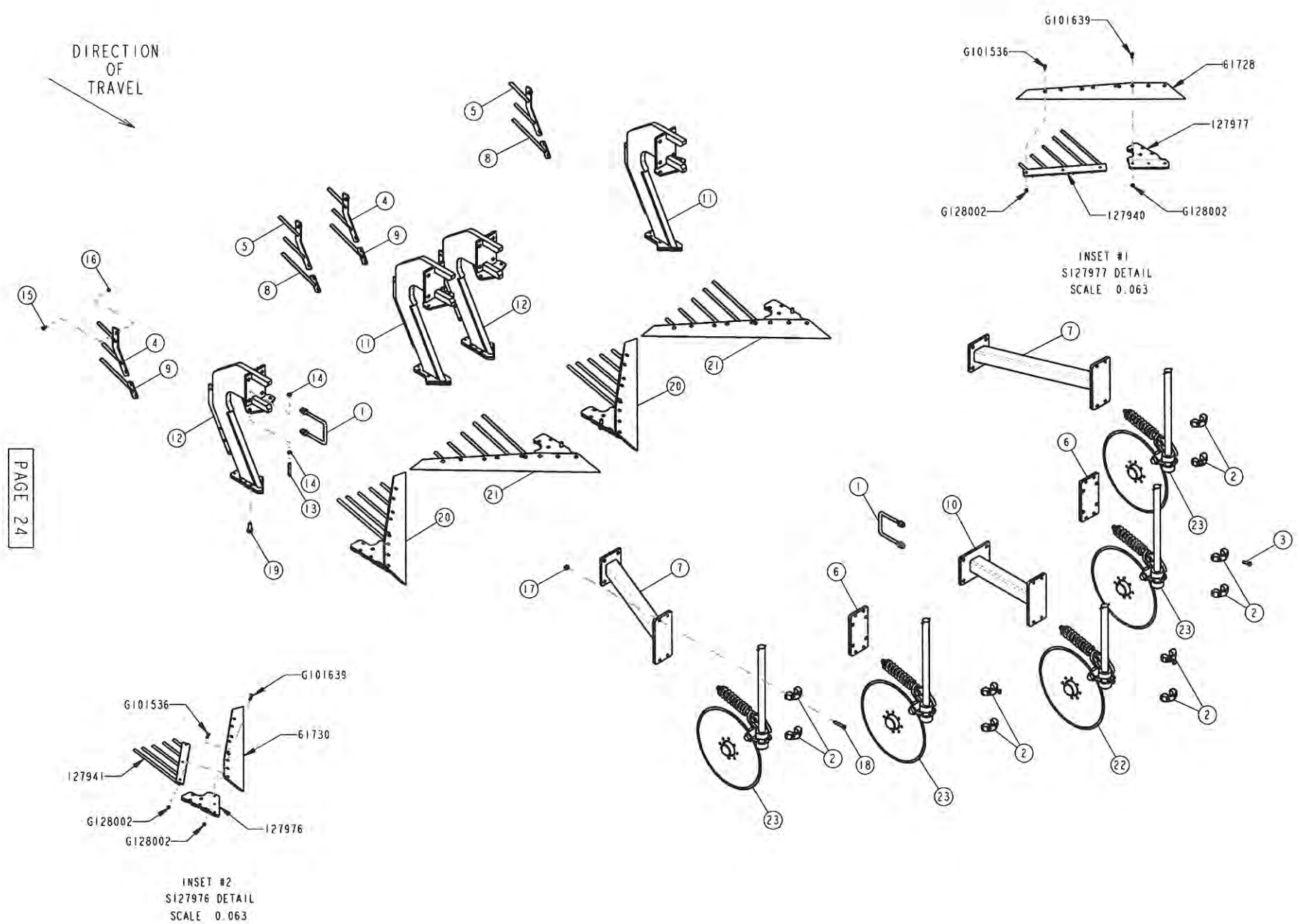
DIRECTION
OF
TRAVEL
G101639
G101536
61728
127977
G128002
127940
G128002
INSET #1
S127977 DETAIL
SCALE 0.063
G101639
G101536
61730
127941
G128002
G128002
127976
INSET #2
S127976 DETAIL
SCALE 0.063

71097 - ADI-836PTF 45/18 CENTER PLOW KIT

ITEM	PART NUMBER	DESCRIPTION	QTY SHOWN	QTY REQ'D	COMMENTS
1	61979	U-BOLT,5/8-18, 5-1/16 X 7 W/NUTS	2	30	
2	80500	CLAMP, COULTER, 1.1/2	10		
3	80501	SETSCREW,1/2-13X1-1/2 SQ HEAD	6	18	
4	93692	MOUNT, GUIDE ROD; LEFT	2		
5	93693	MOUNT, GUIDE ROD; RIGHT	2		
6	94002	MOUNT, YETTER COULTER	2		
7	94226	MOUNT, ANGLED COULTER	2		
8	94348	ROD, 3RD; LEFT	2		
9	94349	ROD, 3RD; RIGHT	2		
10	94977	MOUNT, COULTER; 20.0" EXT	1		
11	127920	SHANK, LEFT DIGGER; 45	2		
12	127921	SHANK, RIGHT DIGGER; 45	2		
13	G110456	SETSCREW, 1/2-13 X 3 SQ. HEAD	1	8	
14	G120238	NUT, 1/2 USS JAM	2	16	
15	G126358	BOLT, 5/16-18 X 1 CARRIAGE; GRADE 5	4	32	
16	G128001	NUT, 5/16-18 SERRATED FLANGE	4	32	
17	G128004	NUT, 1/2-13 SERRATED FLANGE	5	36	
18	G180188	SCREW, 1/2-13 X 2-3/4 USS CAP	5	36	
19	G451802-8	BOLT, 5/8-11 X 1.3/4 LG. FLANGE	4	32	
20	S127976	ASSEMBLY, PLOW;RIGHT 45/18	2		DETAIL #2
21	S127977	ASSEMBLY, PLOW; LEFT 45/18 DEG.	2		DETAIL #1
22	S80499	ASSEMBLY, 22 LG COULTER SHANK	1		
23	S94230	ASSEMBLY, 27.1/8 LG COULTER SHANK	4		

DIRECTION
OF
TRAVEL
71131
LEFT PLOW SET-UP
71128
71131
RIGHT PLOW SET-UP

ITEM	PART NUMBER	DESCRIPTION	QTY SHOWN	QTY REQ'D	COMMENTS

THIS PAGE INTENTIONALLY LEFT BLANK

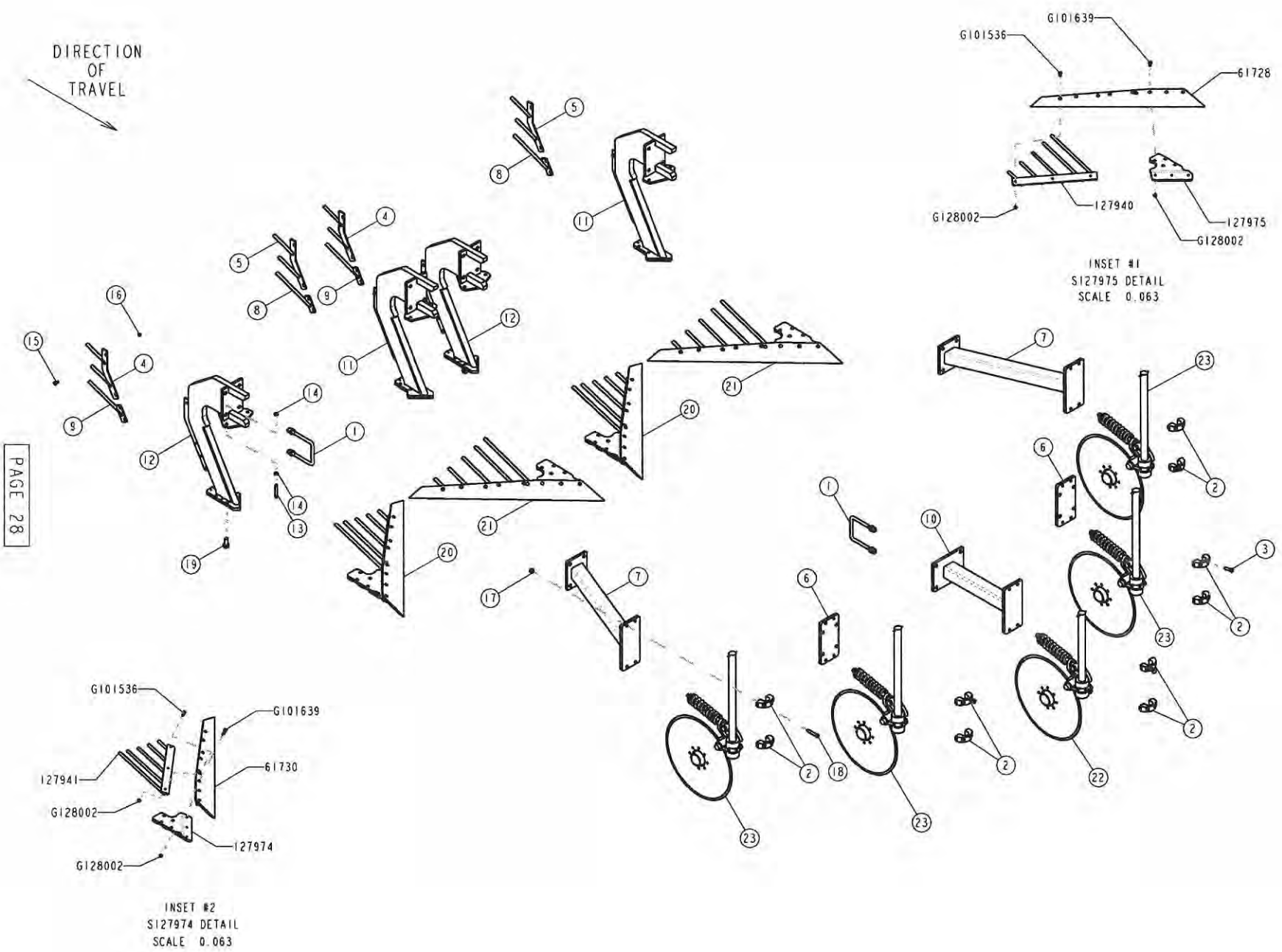
DIRECTION
OF
TRAVEL
PAGE 28
G101639
G101536
61728
127940
G128002
127975
G128002
INSET #1
S127975 DETAIL
SCALE 0.063
G101536
G101639
127941
61730
G128002
127974
G128002
INSET #2
S127974 DETAIL
SCALE 0.063

71128 - AD1-836PTF 45/23 CENTER PLOW KIT

ITEM	PART NUMBER	DESCRIPTION	QTY SHOWN	QTY REQ'D	COMMENTS
1	61979	U-BOLT,5/8-18, 5-1/16 X 7 W/NUTS	2	30	
2	80500	CLAMP, COULTER, 1.1/2	10		
3	80501	SETSCREW,1/2-13X1-1/2 SQ HEAD	6	18	
4	93692	MOUNT, GUIDE ROD; LEFT	2		
5	93693	MOUNT, GUIDE ROD; RIGHT	2		
6	94002	MOUNT, YETTER COULTER	2		
7	94226	MOUNT, ANGLED COULTER	2		
8	94348	ROD, 3RD; LEFT	2		
9	94349	ROD, 3RD; RIGHT	2		
10	94977	MOUNT, COULTER; 20.0" EXT	1		
11	127920	SHANK, LEFT DIGGER; 45	2		
12	127921	SHANK, RIGHT DIGGER; 45	2		
13	G110456	SETSCREW, 1/2-13 X 3 SQ. HEAD	1	8	
14	G120238	NUT, 1/2 USS JAM	2	16	
15	G126358	BOLT, 5/16-18 X 1 CARRIAGE; GRADE 5	4	32	
16	G128001	NUT, 5/16-18 SERRATED FLANGE	4	32	
17	G128004	NUT, 1/2-13 SERRATED FLANGE	5	36	
18	G180188	SCREW, 1/2-13 X 2-3/4 USS CAP	5	36	
19	G451802-8	BOLT, 5/8-11 X 1.3/4 LG. FLANGE	4	32	
20	S127974	ASSEMBLY, PLOW; RIGHT 45/23DEG	2		
21	S127975	ASSEMBLY, PLOW; LEFT 45/23DEG	2		
22	S80499	ASSEMBLY, 22 LG COULTER SHANK	1		
23	S94230	ASSEMBLY, 27.1/8 LG COULTER SHANK	4		

DIRECTION
OF
TRAVEL
71119
RIGHT PLOW SET-UP
71122
71119
LEFT PLOW SET-UP

71118 - ADI-836PTF 37/18 PLOW KIT

ITEM	PART NUMBER	DESCRIPTION	QTY SHOWN	QTY REQ'D	COMMENTS

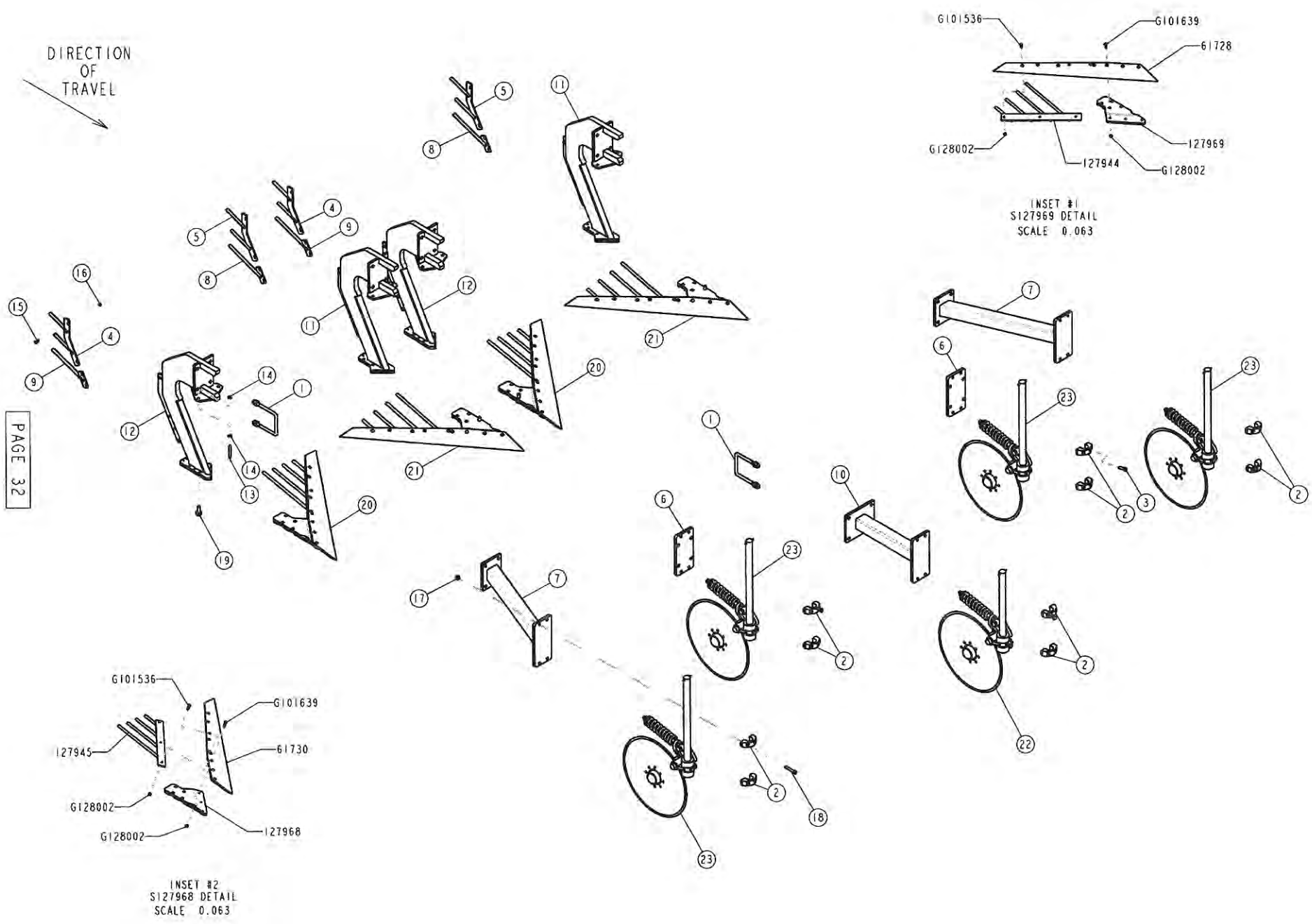
DIRECTION OF TRAVEL
G101536
G101639
61728
G128002
127969
127944
G128002
INSET #1
S127969 DETAIL
SCALE 0.063
G101536
G101639
127945
61730
G128002
G128002
127968
INSET #2
S127968 DETAIL
SCALE 0.063

71122 - ADI-836PTF 37/18 CENTER PLOW KIT

ITEM	PART NUMBER	DESCRIPTION	QTY SHOWN	QTY REQ'D	COMMENTS
1	61979	U-BOLT,5/8-18, 5-1/16 X 7 W/NUTS	2		
2	80500	CLAMP, COULTER, 1.1/2	10		
3	80501	SETSCREW,1/2-13X1-1/2 SQ HEAD	6		
4	93692	MOUNT, GUIDE ROD; LEFT	2		
5	93693	MOUNT, GUIDE ROD; RIGHT	2		
6	94002	MOUNT, YETTER COULTER	2		
7	94226	MOUNT, ANGLED COULTER	2		
8	94348	ROD, 3RD; LEFT	2		
9	94349	ROD, 3RD; RIGHT	2		
10	94977	MOUNT, COULTER; 20.0" EXT	1		
11	127920	SHANK, LEFT DIGGER; 45	2		
12	127921	SHANK, RIGHT DIGGER; 45	2		
13	GI10456	SETSCREW, 1/2-13 X 3 SQ. HEAD	1		
14	GI20238	NUT, 1/2 USS JAM	2		
15	GI26358	BOLT, 5/16-18 X 1 CARRIAGE; GRADE 5	4		
16	GI28001	NUT, 5/16-18 SERRATED FLANGE	4		
17	GI28004	NUT, 1/2-13 SERRATED FLANGE	5		
18	GI80188	SCREW, 1/2-13 X 2-3/4 USS CAP	5		
19	G451802-8	BOLT, 5/8-11 X 1.3/4 LG. FLANGE	4		
20	SI27968	ASSEMBLY, PLOW; RIGHT 37/18 DEG	2		
21	SI27969	ASSEMBLY, PLOW; LEFT 37/18 DEG	2		
22	S80499	ASSEMBLY, 22 LG COULTER SHANK	1		
23	S94230	ASSEMBLY, 27.1/8 LG COULTER SHANK	4		

DIRECTION
OF
TRAVEL
71121
RIGHT PLOW SET-UP
71123
71121
LEFT PLOW SET-UP

71120 - ADI-836PTF 40/20 PLOW KIT

ITEM	PART NUMBER	DESCRIPTION	QTY SHOWN	QTY REQ'D	COMMENTS

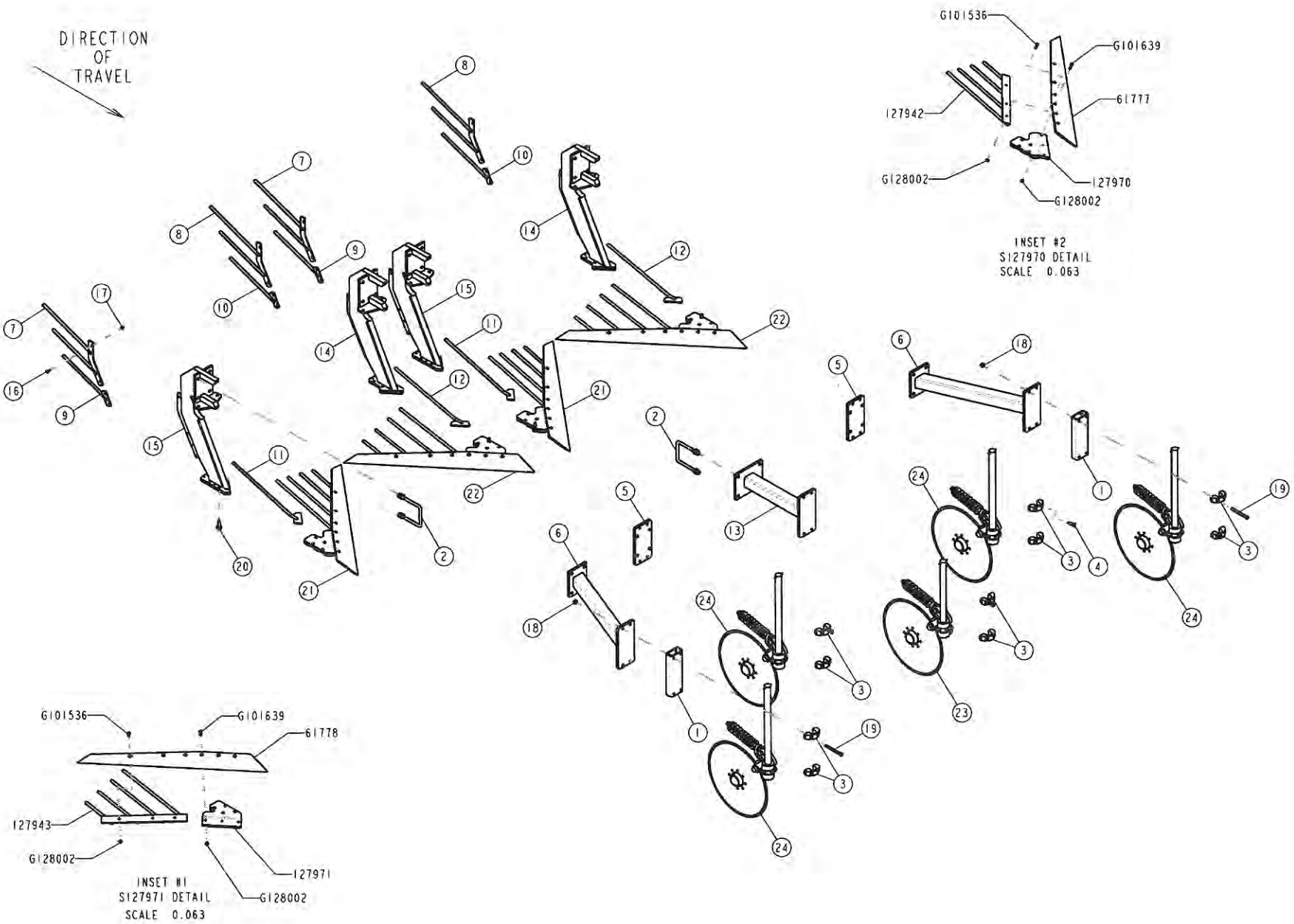
DIRECTION
OF
TRAVEL
G101536
G101639
61777
127942
G128002
127970
G128002
INSET #2
S127970 DETAIL
SCALE 0.063
G101536
G101639
61778
127943
G128002
127971
G128002
INSET #1
S127971 DETAIL
SCALE 0.063

71123 - AD1-836PTF 40/20 CENTER PLOW KIT

ITEM	PART NUMBER	DESCRIPTION	QTY SHOWN	QTY REQ'D	COMMENTS
1	20846	SPACER, COULTER MT	2		
2	61979	U-BOLT,5/8-18, 5-1/16 X 7 W/NUTS	2	18	
3	80500	CLAMP, COULTER, 1.1/2	10		
4	80501	SETSCREW,1/2-13X1-1/2 SQ HEAD	6		
5	94002	MOUNT, YETTER COULTER	2		
6	94226	MOUNT, ANGLED COULTER	2		
7	94466	MT, GUIDE ROD, SHALLOW SHANK RT	2		
8	94467	MT, GUIDE ROD; SHALLOW SHANK LFT	2		
9	94468	ROD, 3RD LONG; RT	2	OPT	
10	94469	ROD, 3RD LONG; LFT	2	OPT	
11	94470	ROD, EXTRA; RIGHT	2		
12	94471	ROD, EXTRA; LEFT	2		
13	94977	MOUNT, COULTER; 20.0" EXT	1		
14	127918	SHANK, LEFT 40 DIGGER	2		
15	127919	SHANK, RIGHT DIGGER; 40	2		
16	G126358	BOLT, 5/16-18 X 1 CARRIAGE; GRADE 5	4		
17	G128001	NUT, 5/16-18 SERRATED FLANGE	4		
18	G128004	NUT, 1/2-13 SERRATED FLANGE	5		
19	G433163	SCREW, 1/2-13 X 5 USS CAP	2		
20	G451802-8	BOLT, 5/8-11 X 1.3/4 LG. FLANGE	4		
21	S127970	ASSEMBLY, PLOW; RIGHT 40/20 DEG.	2		
22	S127971	ASSEMBLY, PLOW LEFT 40/20 DEG	2		
23	S80499	ASSEMBLY, 22 LG COULTER SHANK	1		
24	S94230	ASSEMBLY, 27.1/8 LG COULTER SHANK	4		

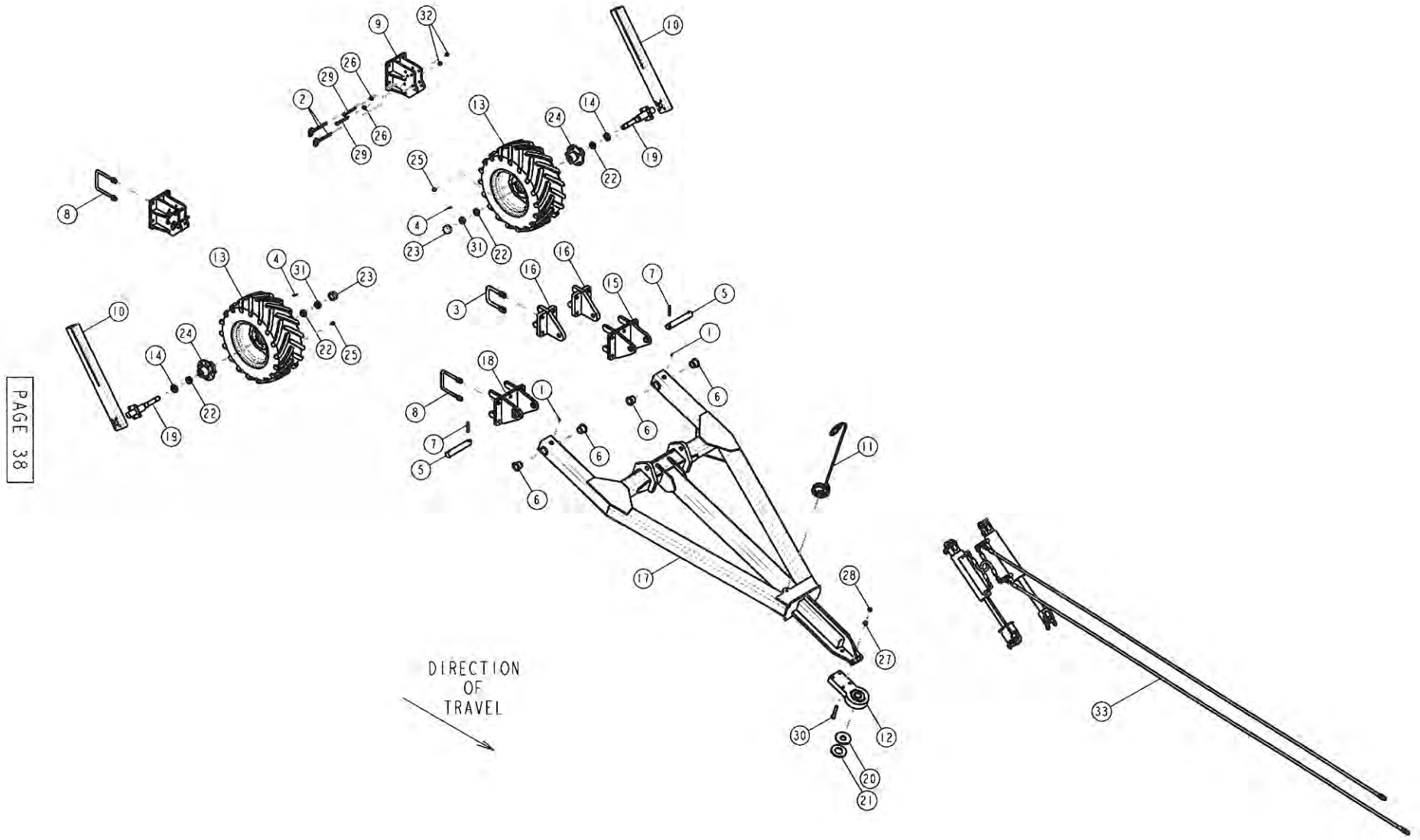
DIRECTION
OF
TRAVEL

8-ROW PULL TYPE FOLDING DIGGER TONGUE

ITEM	PART NUMBER	DESCRIPTION	QTY SHOWN	QTY REQ'D	COMMENTS
1	1590	FITTING, GREASE 3/16 DRIVE-IN X 1/2 LG	2		
2	1673	PIN, HITCH; 1/2 DIA. X 4-3/4 LONG	4		
3	1836	U-BOLT, 3/4-10 X 6 LG. X 4.1/16 W	1		
4	2212	PIN, COTTER 5/32X1-1/2	2		
5	20845	PIN, HITCH; CAT III	2		
6	21012	BUSHING, TOP HAT; 1-7/16	4		
7	21018	PIN, ROLL 1/2 X 3; HEAVY DUTY	2		
8	61979	U-BOLT,5/8-18, 5-1/16 X 7 W/NUTS	2		
9	62263	MOUNT, FRT GAUGE WHEEL	2		
10	62264	TUBE, GAUGE WHEEL MT	2		
11	80403	HOLDER, HYDRAULIC HOSE; FLEXIBLE	1		
12	80511	HITCH, BEARING; 2" WITH 1-1/2" SLEEVE	1		
13	80572	WHEEL ASSEMBLY, 23X10.5;6P;5 ON 4.5BC	2		
14	80640	SEAL, DOUBLE LIP 1-1/4" ID	2		
15	94754	HITCH, LOWER; 5" TUBING	1		
16	94755	HITCH, TONGUE, CYLINDER	2		
17	94808	MOUNT, ADJ TONGUE; HEAVY	1		
18	94809	HITCH, LOWER; 5" TUBING	1		
19	100019	SPINDLE, DIGGER FRT GAUGE	2		
20	127835	SPACER, HITCH; 1-1/2 ID X 1/4 THICK	1		
21	128323	SPACER, HITCH; 2 ID X 1/4 THICK	1		
22	80113B	CONE & ROLLER ASSEMBLY, FOR 1" SHAFT	4		
23	80113D	CAP, HUB	2		
24	80569A	ASSEMBLY, HUB & CUP; 5 BOLT	2		
25	92856D	NUT, 1/2-13 USS	10		
26	G120396	WASHER, 1/2 SAE FLAT	4		
27	G121358-8	NUT, 5/8-18 SAE; GRADE 8	1		
28	G124944	NUT, 5/8-18 SAE JAM	1		
29	G180194	SCREW, 1/2-13 X 4 LG. HEX HEAD CAP	4		
30	G271756-8	SCREW, 5/8-18 X 4 SAE CAP GR8	1		
31	G272325	NUT, 1-14 SAE HEX SLOTTED	2		
32	G431800	LOCKNUT, 1/2-13 USS NYLOCK HEX	4		
33	X708	KIT, HYDRAULICS, PT DIGGER	1		

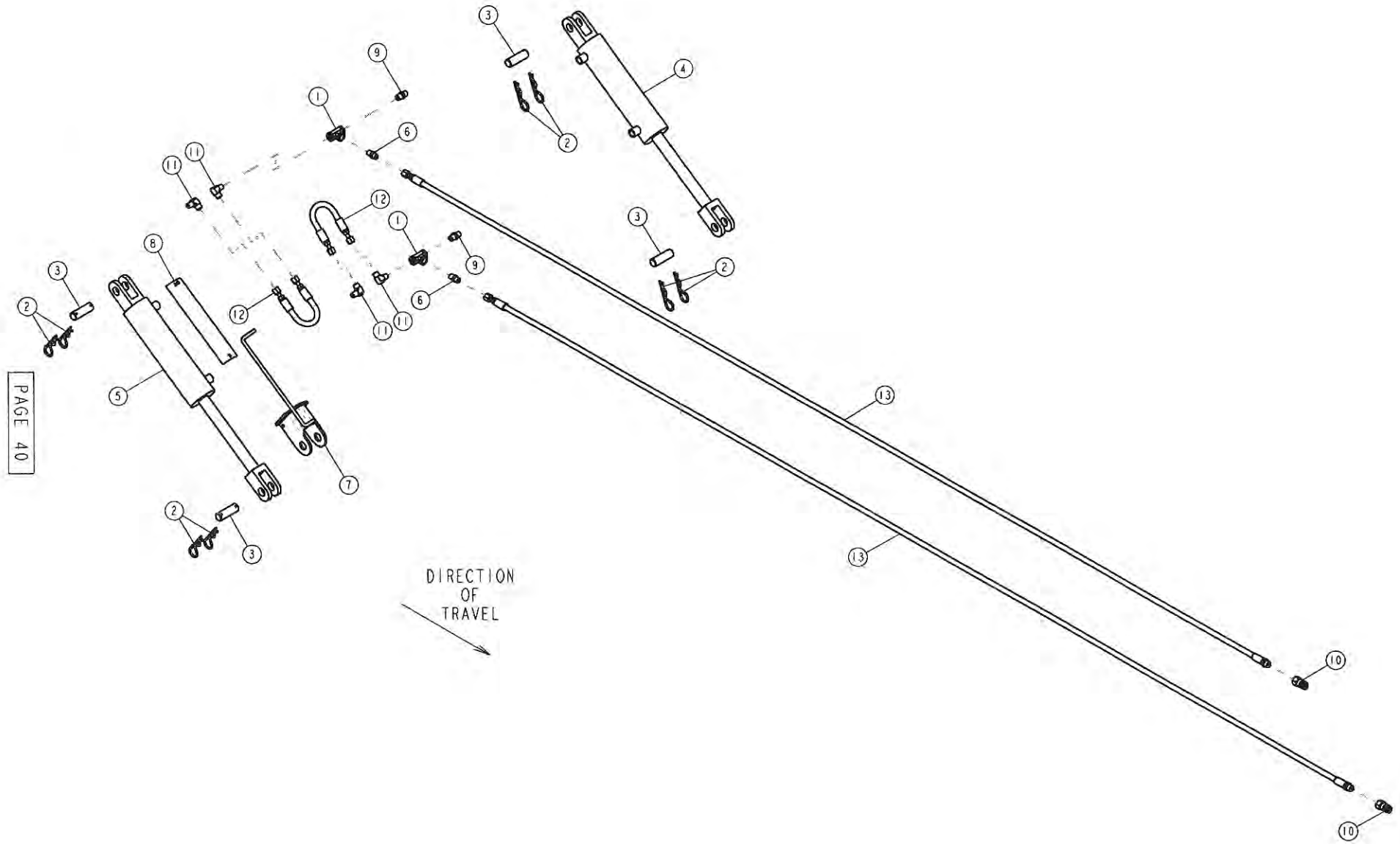
DIRECTION
OF
TRAVEL

8-ROW & 12-ROW PULL TYPE DIGGER HYDRAULIC TONGUE KIT

ITEM	PART NUMBER	DESCRIPTION	QTY SHOWN	QTY REQ'D	COMMENTS
1	2049	HYDF, 3/8 NPT FEMALE TEE	2		
2	2196	PIN, PLATED HAIR COTTER; 3-9/16 X .178	8		
3	2908	CLEVIS, 1 X 3-1/16 W/HOLES	4		
4	14832	CYLINDER,10X3X1.25HYDRAULIC	1		
5	14832	CYLINDER,10 X 3 X 1.25 HYDRAULIC	1		
6	16900	HYDF,-4 ORF TO 1/4 MPT, TAPPED 1/4-20	2		
7	62353	INDICATOR, DIGGER DEPTH	1		
8	80749	DECAL,DIGGER DIGGING DEPTH	1		
9	140125	ADAPTOR,3/8 NPT MALE	2		
10	140341	COUPLER,8 ORBF-1/2 QDM	2		
11	140457	HYDF, ELBOW; 90 3/8 NPT X 6 ORF	4		
12	140841	HOSE, HYD; 3/8 12" LONG	2		
13	140842	HOSE, HYD; 3/8 X 132	2		

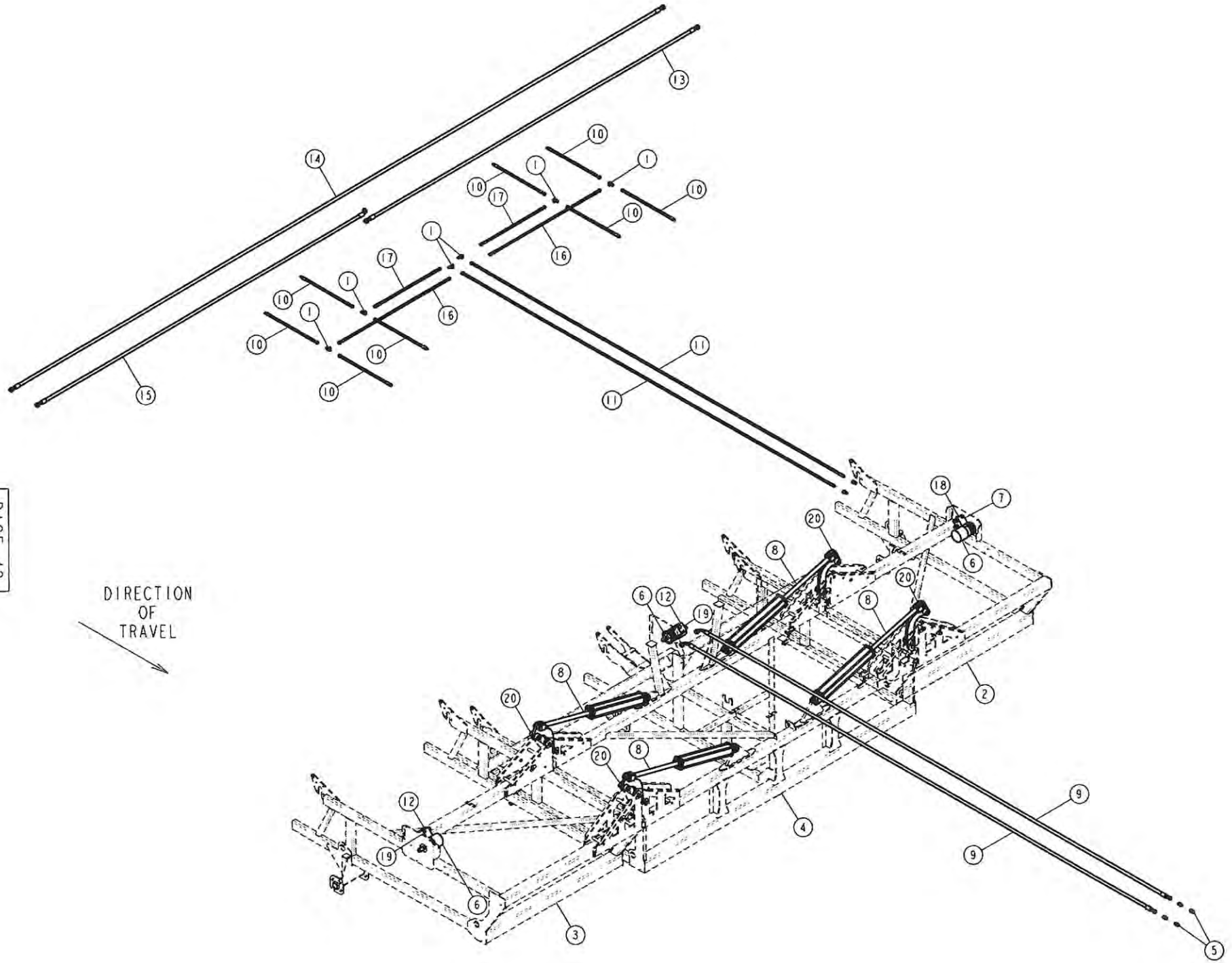
DIRECTION
OF
TRAVEL

ADI-836PTF HYDRAULICS

ITEM	PART NUMBER	DESCRIPTION	QTY SHOWN	QTY REQ'D	COMMENTS
1	16146	HYDF, -8 ORF TEE MALE	6		
2	94773	FRAME, ADI-236 LFT WING	1		
3	94774	FRAME, ADI-236 RIGHT WING	1		
4	94954	FRAME, ADI-836PTF	1		
5	140341	COUPLER,8 ORBF-1/2 QDM	4		
6	140641	MOTOR, HYD.; 18.3 CU. IN. W/MANIFOLD MT.	3		
7	140644	MANIFOLD, W/CV103P CARTRIDGE	1		
8	140909	CYLINDER, 24x3-1/2x1.5 HYDRAULIC	4		
9	140916	HOSE, HYD; 3/4 X 240	2		
10	140923	HOSE, 1/2 X 24; HYD	8		
11	140924	HOSE, 1/2 X 192; HYD	2		
12	140927	MANIFOLD, WITH CV103P CARTRIDGE	2		
13	140974	HOSE, 3/4 X 166; HYD	1		
14	140975	HOSE, 3/4 X 336	1		
15	140976	HOSE, 3/4 X 166; HYD	1		
16	140977	HOSE, 1/2 X 51; HYD	2		
17	140978	HOSE, 1/2 X 27; HYD	2		
18	S140641	ASSEMBLY, MANIFOLD/GAUGE	1		
19	S140927	ASSEMBLY, MANIFOLD; RIGHT	2		
20	S62319	LINK, DIGGER; ASSEMBLY	4		

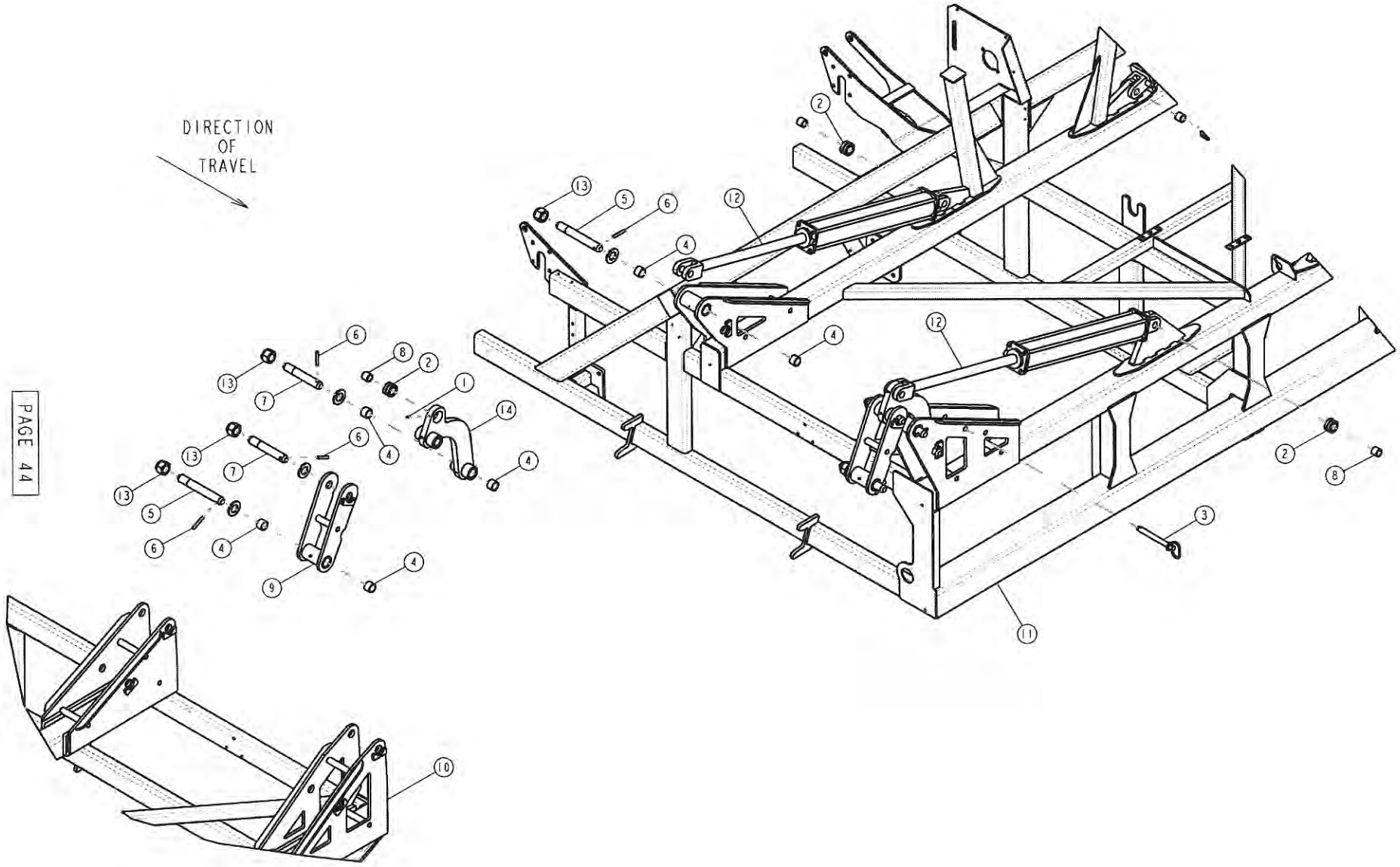
DIRECTION
OF
TRAVEL

ADI-836PTF RIGHT LINKAGE SECTION

ITEM	PART NUMBER	DESCRIPTION	QTY SHOWN	QTY REQ'D	COMMENTS
1	1590	FITTING, GREASE 3/16 DRIVE-IN X 1/2 LG	4		
2	3263	INSERT, 2-3/16 BEARING, NONRELUB.; ECCENTRIC	4		
3	20386	PIN, HITCH; 3/4 DIA. X 7 LONG	2		
4	20984	BUSHING,1-1/2 ODX1-1/4IDX1"LG	13		
5	20991	PIN, CYLINDER PIVOT	8		
6	21014	PIN, ROLL 3/8 X 2-1/2; HEAVY DUTY	16		
7	21017	PIN, CYLINDER PIVOT	8		
8	21020	BUSHING, 1-1/16" LG X 1-1/4 OD X 11 GA WALL	8		
9	62320	LINK, DIGGER WING LIFT	4		
10	94774	FRAME, ADI-236 RIGHT WING	1		
11	94954	FRAME, ADI-836PTF	1		
12	140909	CYLINDER, 24x3-1/2x1.5 HYDRAULIC	4		
13	G9419533	LOCKNUT, 1-1/4-7, GRADE 8	16		
14	S62319	LINK, DIGGER; ASSEMBLY	4		

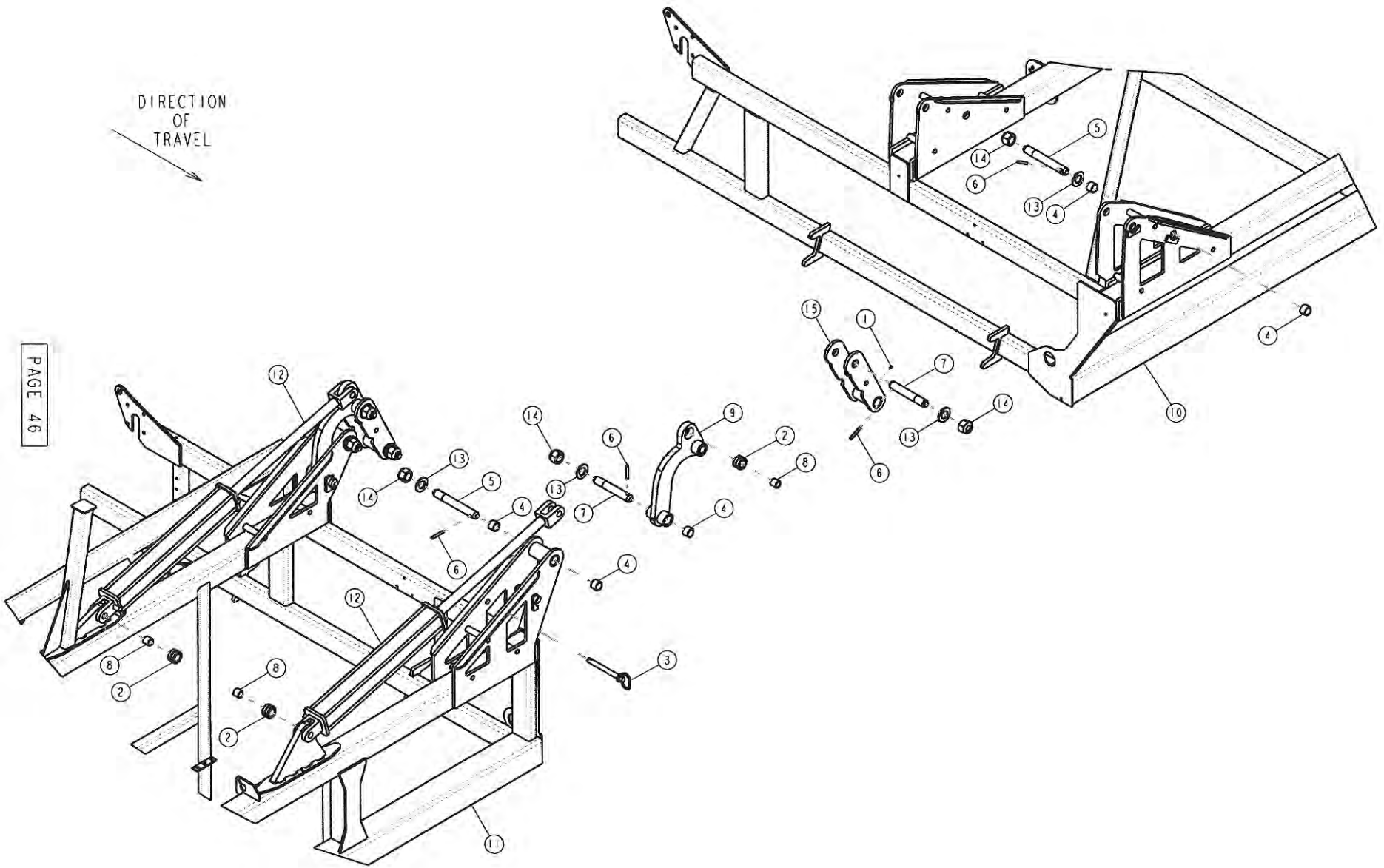
DIRECTION
OF
TRAVEL

ADI-836PTF LEFT LINKAGE SECTION

ITEM	PART NUMBER	DESCRIPTION	QTY SHOWN	QTY REQ'D	COMMENTS
1	1590	FITTING, GREASE 3/16 DRIVE-IN X 1/2 LG	12		
2	3263	INSERT, 2-3/16 BEARING, NONRELUB.; ECCENTRIC	8		
3	20386	PIN, HITCH; 3/4 DIA. X 7 LONG	2		
4	20984	BUSHING,1-1/2 ODX1-1/4IDX1"LG	21		
5	20991	PIN, CYLINDER PIVOT	8		
6	21014	PIN, ROLL 3/8 X 2-1/2; HEAVY DUTY	16		
7	21017	PIN, CYLINDER PIVOT	8		
8	21020	BUSHING, 1-1/16" LG X 1-1/4 OD X 11 GA WALL	8		
9	62319	TOGGLE, DIGGER WING LIFT	4		
10	94773	FRAME, ADI-236 LFT WING	1		
11	94954	FRAME, ADI-836PTF	1		
12	140909	CYLINDER, 24x3-1/2x1.5 HYDRAULIC	4		
13	G131021	WASHER, 1-1/4 SAE FLAT	16		
14	G9419533	LOCKNUT, 1-1/4-7, GRADE 8	16		
15	S62320	TOGGLE, DIGGER; ASSEMBLY	4		

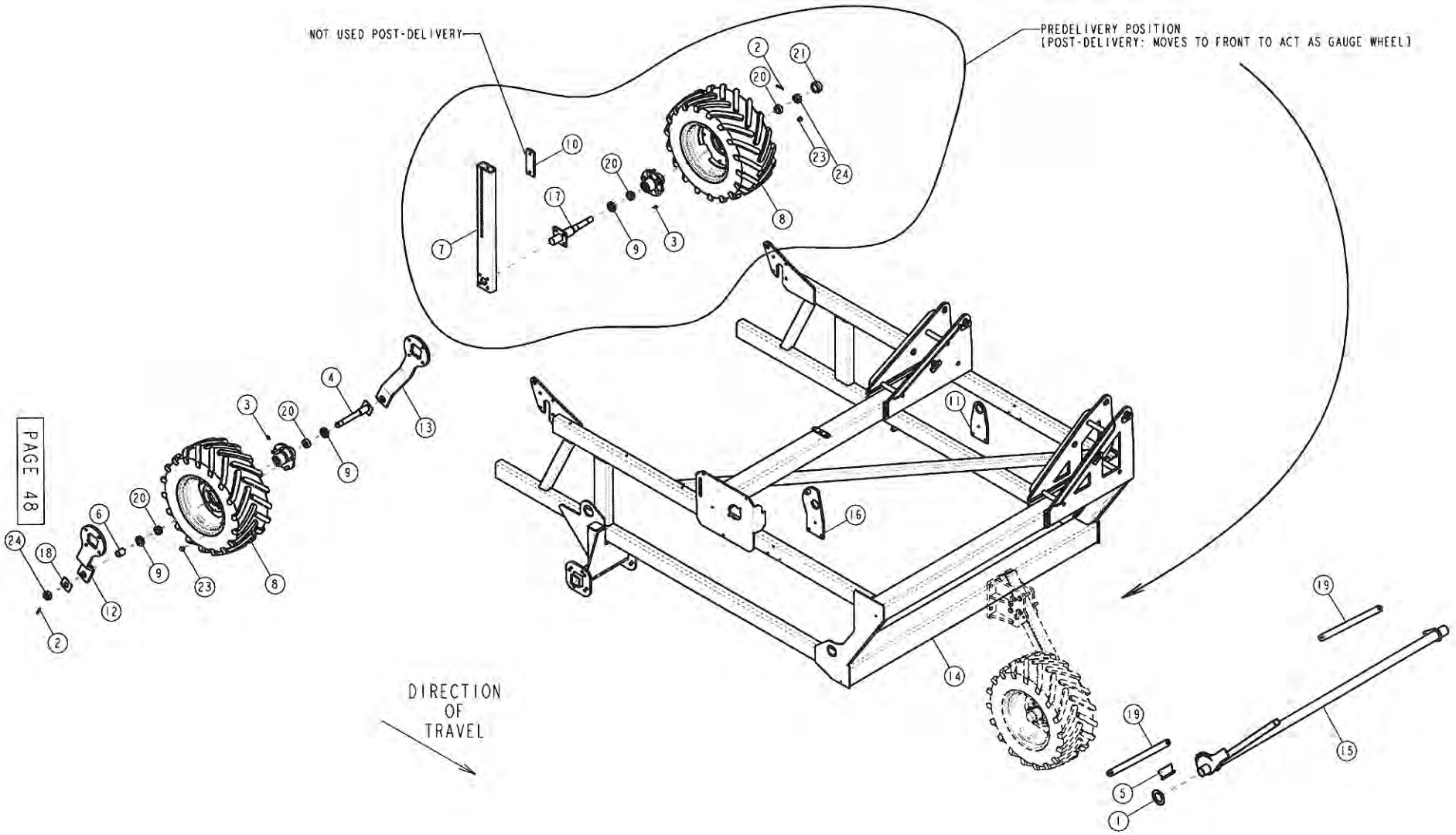
NOT USED POST-DELIVERY
PREDELIVERY POSITION
(POST-DELIVERY: MOVES TO FRONT TO ACT AS GAUGE WHEEL)
DIRECTION
OF
TRAVEL

PAGE 48

ADI-236 PT RIGHT FRAME SECTION

ITEM	PART NUMBER	DESCRIPTION	QTY SHOWN	QTY REQ'D	COMMENTS
1	1866	WASHER, 3-1/4 OD x 2 ID	1		
2	2212	PIN, COTTER 5/32X1-1/2	2		
3	2247	FITTING, GREASE; 3/6 DRIVE-IN X 45 DEGREE	2		COMES WITH HUB 80569A
4	10953	SPINDLE, WHEEL MOUNT	1		
5	20421	PIN, SNAPPER; 3/8 DIA. X 3 LONG	1		
6	20915	SPACER, 1-9/16 LG.	1		
7	62264	TUBE, GAUGE WHEEL MT	1		
8	80572	WHEEL ASSEMBLY, 23X10.5;6P;5 ON 4.5BC	2		
9	80640	SEAL, DOUBLE LIP 1-1/4" ID	3		
10	80738	MOUNT, WHEEL;TEMPORARY	1		NOT USED POST-DELIVERY
11	93819	MOUNT, CONVEYOR LIFT	1		
12	94195	PLATE, GAUGE WHEEL FORK	1		
13	94196	PLATE, GAUGE WHEEL FORK	1		
14	94774	FRAME, ADI-236 RIGHT WING	1		
15	94800	LIFT, 236 WING; LEFT	1		
16	94801	MOUNT, CONVERYOR LIFT; RT	1		
17	100019	SPINDLE, DIGGER FRT GAUGE	1		
18	127953	WASHER, WHEEL MOUNT	1		
19	128962	BRACKET, CONVERYOR HANGING	2		
20	80113B	CONE & ROLLER ASSEMBLY, FOR 1" SHAFT	4		
21	80113D	CAP, HUB	1		
22	80569A	ASSEMBLY, HUB & CUP; 5 BOLT	4		
23	92856D	NUT, 1/2-13 USS	6	10	
24	G272325	NUT, 1-14 SAE HEX SLOTTED	2		

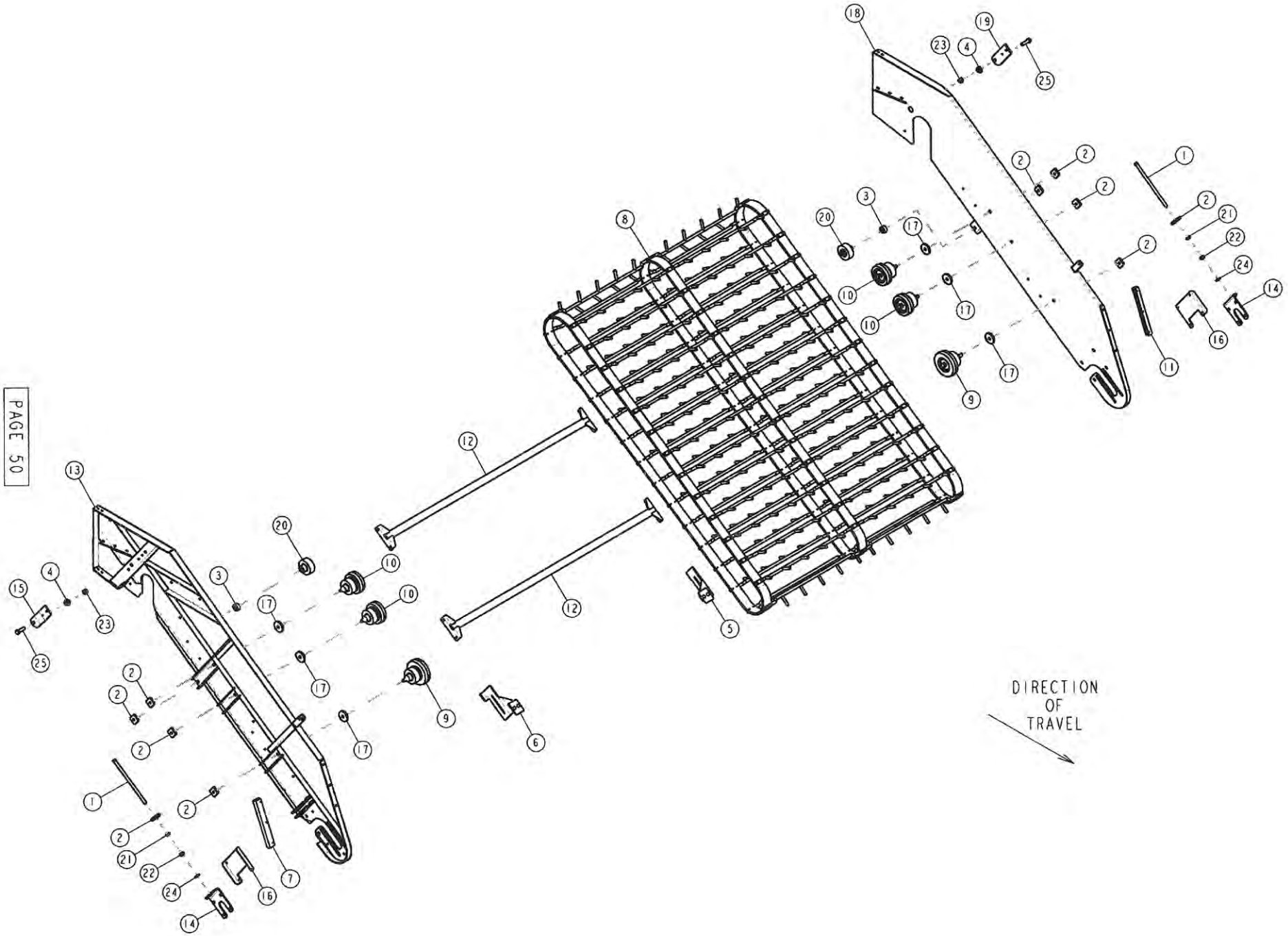
DIRECTION
OF
TRAVEL

ADI-236PT RIGHT CONVEYOR SECTION

ITEM	PART NUMBER	DESCRIPTION	QTY SHOWN	QTY REQ'D	COMMENTS
1	1841	ROD, ADJUSTING; BEARING	2		
2	2020	NUT, 5/8-11,2X1-3/4 IDLER ADJ	10		
3	20830	SPACER, 1.50 OD X .671 ID X .75 LONG	2		
4	51692	BUSHING, CONVEYOR PIVOT	2		
5	70829	SCRAPER, LFT FRONT IDLER	1		
6	70830	SCRAPER, RT FRONT IDLER	1		
7	80455	BUMPER, DIGGER SIDE	1		
8	80523	CONVEYOR, BELT & BAR; 62,17/32 WIDE	1		
9	80530	ROLLER, SHAKER; 6"	2		
10	80531	SHAKER, ROLLER; 5"	4		
11	80728	BUMPER, DIGGER SIDE	1		
12	94240	BRACE, CROSS; 36" DIGGER	2		
13	127895	SIDE, CONVEYOR;OUTER RIGHT	1		
14	127897	BRACKET, DIGGER SIDE	2		
15	127928	GUIDE, CONV.SIDE; LEFT	1		
16	127972	PLATE, REINFORCEMENT	2		
17	127995	SPACER, SHAKER IDLER	6		
18	128947	SIDE, LEFT NARROW	1		
19	128948	GUIDE, CONV.SIDE; STRAIGHT	1		
20	80531B	ROLLER, 3.5"	2		
21	G120240	NUT, 5/8-11 USS JAM	2		
22	G124589	NUT, 5/8-11 USS	2		
23	G124590	LOCKNUT, 5/8-11 NYLOCK	2		
24	G131016	WASHER, 5/8 SAE FLAT	2		
25	G271723	SCREW, 5/8-11 X 2 USS CAP	2		

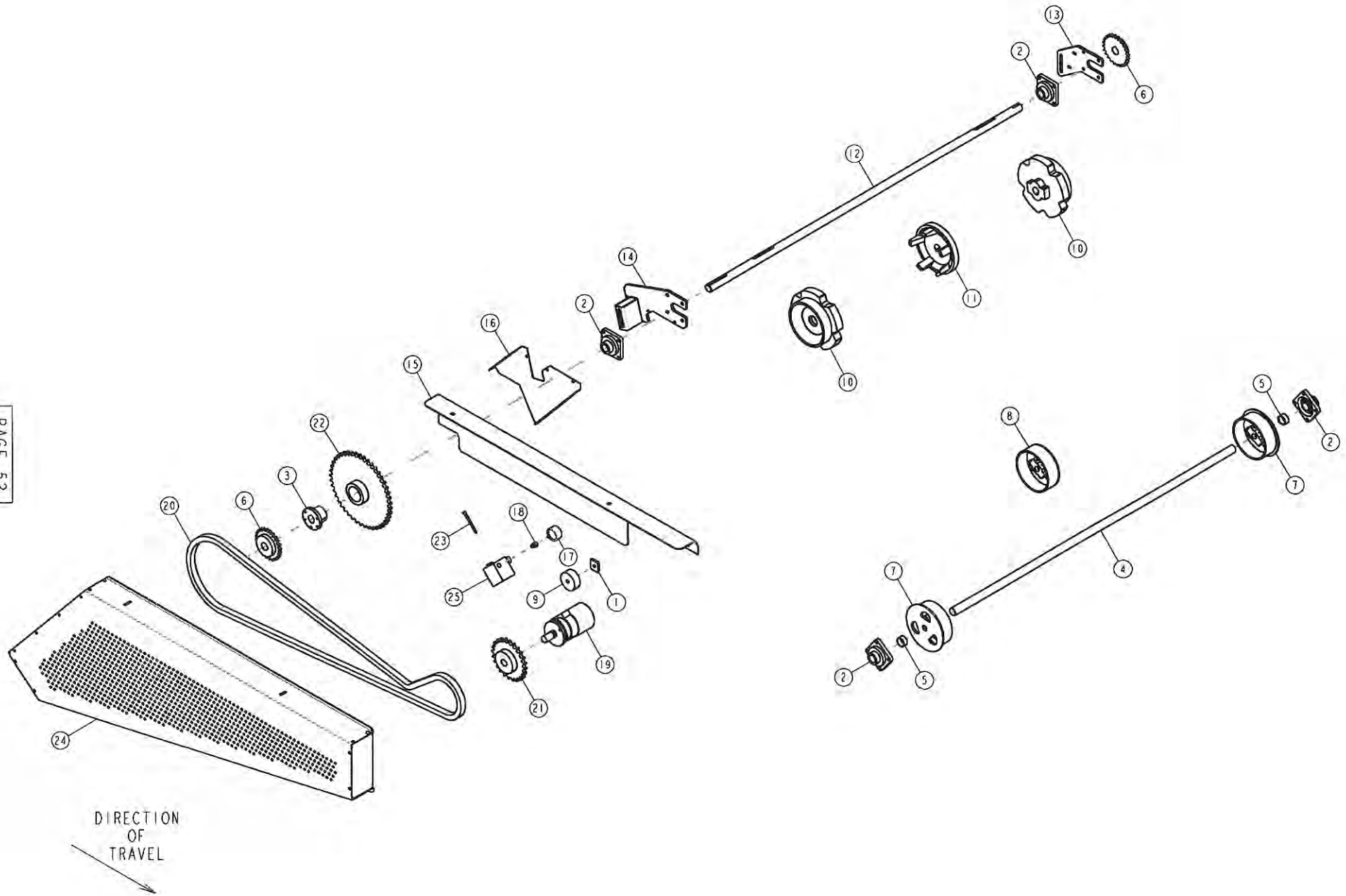
DIRECTION
OF
TRAVEL

ADI-236 PT RIGHT GENERIC DRIVE

ITEM	PART NUMBER	DESCRIPTION	QTY SHOWN	QTY REQ'D	COMMENTS
1	2020	NUT, 5/8-11,2X1-3/4 IDLER ADJ	1		
2	3253	BEARING, 1.7/16" 4-H; TRIPLE LIP	4		
3	5914	BUSHING, 01 1-7/16	1		
4	10936	SHAFT, IDLER; 36" DIGGER	1		
5	20957	BUSHING,DIGGER IDLER	2		
6	51079	SPROCKET, 60B24 F1-7/16; 2 SETSCREWS	2		
7	51661	IDLER, 2-PIECE FLANGED	2		
8	51663	IDLER, 2-PIECE NON-FLANGED	1		
9	80491	SNUGULATOR, 1-3/8 W; 5/8 BORE	1		
10	80525	SPROCKET, SP150 URETHANE 1-7/16 BORE	2		
11	80641	IDLER, CAST SPLIT	1		
12	100027	SHAFT, DRIVE; 236 LEFT WING	1		
13	128949	PLATE, IDLER BRACKET	1		
14	128960	BRACKET, IDLER DRIVE	1		
15	128983	SHIELD, MAIN DRIVE BACK	1		
16	128991	SHIELD, INVERTER DRIVE; INNER	1		
17	140506	GAUGE, PRESSURE; 5000 PSI	1		
18	140545	HYDFITTING,-6 ORB X 1/4 NPTF	1		
19	140641	MOTOR, HYD.; 18.3 CU. IN. W/MANIFOLD MT.	1		
20	4365D-149	CHAIN,NO.80;147 PITS + OFFSET + CONNECTOR	1		
21	80B24-1-4	SPROCKET, 80B24;F1.1/4; 2 SETSCREWS	1		
22	80Q45	SPROCKET, 80Q45	1		
23	GI1500721	SCREW, M8 X 100MM X 1.25 PITCH SOCKET HEAD	1	4	
24	S128966	ASM, MAIN DRIVE SHIELD	1		
25	S140927	ASSEMBLY, MANIFOLD, RIGHT	1		

RIGHT WING
INVERTER SET-UP

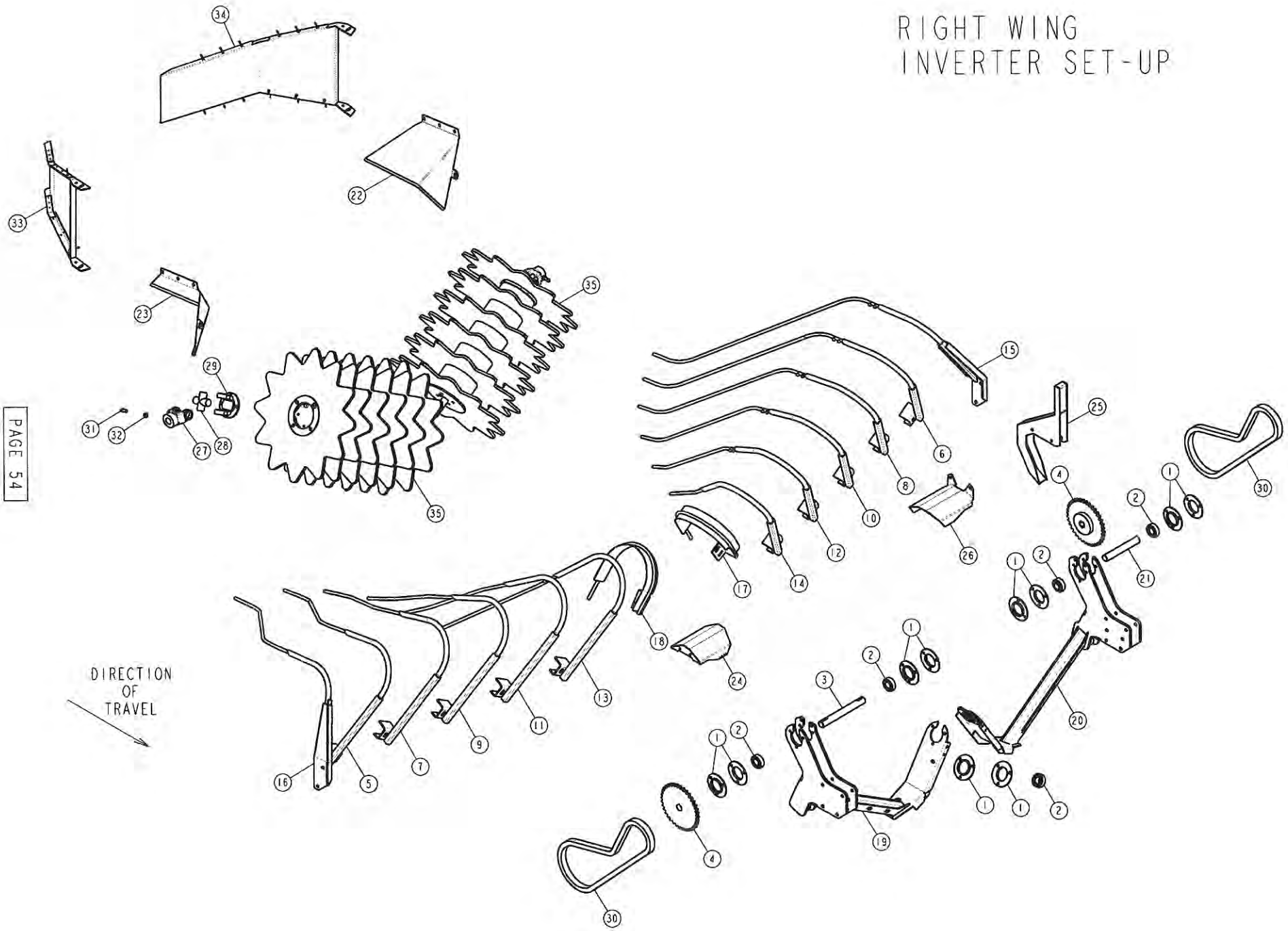

2-ROW 36" TWIN V INVERTER KIT;RIGHT - 71071

ITEM	PART NUMBER	DESCRIPTION	QTY SHOWN	QTY REQ'D	COMMENTS
1	3093	FLANGETTE, 62MS FOR 1.3/16 BEARING	12		
2	3096	INSERT, 1.3/16 REPLACEMENT BEARING	6		
3	10952	SHAFT, INVERTER OUTER LEFT	1		
4	51002	SPROCKET, 60B36 FJ-3/16	2		
5	61949	ROD, INVERTER; #2 RIGHT "V"	1		
6	61950	ROD, INVERTER; #2 LEFT "V"	1		
7	61951	ROD, INVERTER; #3 RIGHT "V"	1		
8	61952	ROD, INVERTER; #3 LEFT "V"	1		
9	61953	ROD, INVERTER; #4 RIGHT "V"	1		
10	61954	ROD, INVERTER; #4 LEFT "V"	1		
11	61955	ROD, INVERTER; #5 RIGHT "V"	1		
12	61956	ROD, INVERTER; #5 LEFT "V"	1		
13	61957	ROD, INVERTER; #6 RIGHT "V"	1		
14	61958	ROD, INVERTER; #6 LEFT "V"	1		
15	62037	ROD, #1 INVERTER; LEFT "V"	1		
16	62038	ROD, #1 INVERTER; RIGHT "V"	1		
17	62099	ROD, INNER; RIGHT W/SHIELD	1		
18	62100	ROD, INNER; LEFT W/SHIELD	1		
19	94484	MOUNT, INVERTER; 36 RIGHT	1		
20	94485	MOUNT, INVERTER; 36 LEFT	1		
21	100030	SHAFT, V INVERTER	1		
22	128137	SHIELD, LFT VINE DEFLECTOR	1		
23	128138	SHIELD, RT VINE DEFLECTOR	1		
24	128140	SHIELD, U-JOINT, OUTER RIGHT	1		
25	129004	SHIELD, INVERTER DRIVE; NARROW	1		
26	129006	SHIELD, U-JOINT; NARROW LFT	1		
27	11377A	YOKE, 1-3/16 BORE X 3.25 LENGTH	2		
28	11377B	SPIDER, 1-1/4 X 3-7/32 OA	2		
29	11377C	YOKE, 4-3/8 FLANGE	2		
30	4043D-84	CHAIN, #60,83PITS+CONN	2		
31	G139454	SETSCREW, 7/16-14 X 1 LG.;SQ. HEAD	2		
32	G271509	NUT, 7/16-14 USS JAM	2		
33	S128152	FENDER,RIGHT	1		
34	S128153	FENDER; LEFT	1		
35	S94455	ASSEMBLY, SOLID "V" INV. ROTOR; 36"	2		

RIGHT WING PLOW SETUP

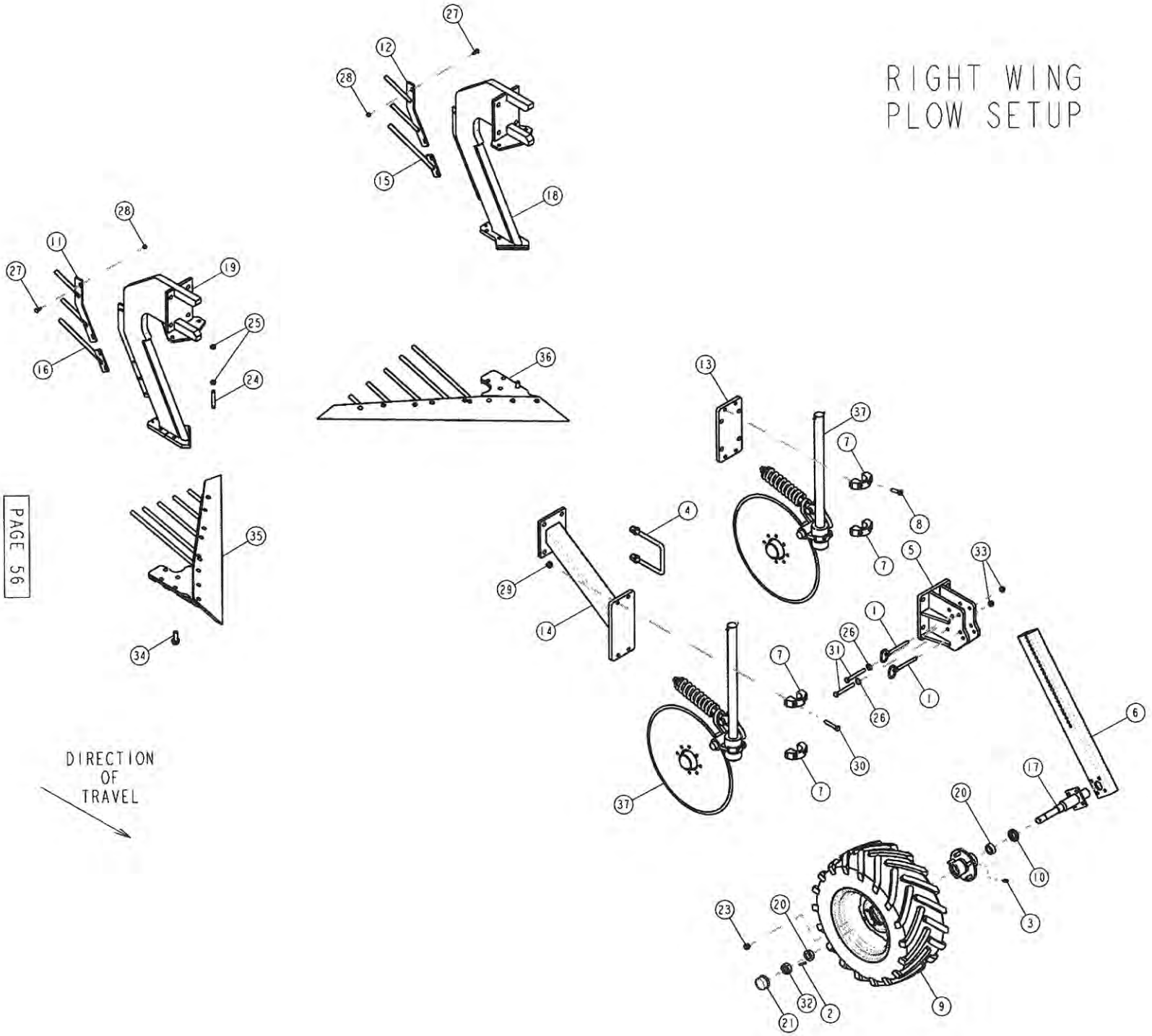

236 PULL TYPE RIGHT PLOW/COULTER KIT - 45/18

ITEM	PART NUMBER	DESCRIPTION	QTY SHOWN	QTY REQ'D	COMMENTS
1	1673	PIN, HITCH; 1/2 DIA. X 4-3/4 LONG	2		
2	2212	PIN, COTTER 5/32X1-1/2	1		
3	2247	FITTING, GREASE; 3/6 DRIVE-IN X 45 DEGREE	1		COMES WITH HUB 80569A
4	61979	U-BOLT,5/8-18, 5-1/16 X 7 W/NUTS	1	8	
5	62263	MOUNT, FRT GAUGE WHEEL	1		
6	62264	TUBE, GAUGE WHEEL MT	1		
7	80500	CLAMP, COULTER, 1.1/2	4		
8	80501	SETSCREW,1/2-13X1-1/2 SQ HEAD	2	4	
9	80572	WHEEL ASSEMBLY, 23X10.5;6P;5 ON 4.5BC	1		
10	80640	SEAL, DOUBLE LIP 1-1/4" ID	1		
11	93692	MOUNT, GUIDE ROD; LEFT	1		
12	93693	MOUNT, GUIDE ROD; RIGHT	1		
13	94002	MOUNT, YETTER COULTER	1		
14	94226	MOUNT, ANGLED COULTER	1		
15	94348	ROD, 3RD; LEFT	1		
16	94349	ROD, 3RD; RIGHT	1		
17	100019	SPINDLE, DIGGER FRT GAUGE	1		
18	127920	SHANK, LEFT DIGGER; 45	1		--SEE NOTE 1--
19	127921	SHANK, RIGHT DIGGER; 45	1		--SEE NOTE 1--
20	80113B	CONE & ROLLER ASSEMBLY, FOR 1" SHAFT	2		
21	80113D	CAP, HUB	1		
22	80569A	ASSEMBLY, HUB & CUP; 5 BOLT	2		
23	928560	NUT, 1/2-13 USS	5		
24	G110456	SETSCREW, 1/2-13 X 3 SQ. HEAD	1	4	
25	G120238	NUT, 1/2 USS JAM	2	8	
26	G120396	WASHER, 1/2 SAE FLAT	2		
27	G126358	BOLT, 5/16-18 X 1 CARRIAGE; GRADE 5	2	8	
28	G128001	NUT, 5/16-18 SERRATED FLANGE	2	8	
29	G128004	NUT, 1/2-13 SERRATED FLANGE	2	8	
30	G180188	SCREW, 1/2-13 X 2-3/4 USS CAP	2	8	
31	G180194	SCREW, 1/2-13 X 4 LG. HEX HEAD CAP	2		
32	G272325	NUT, 1-14 SAE HEX SLOTTED	1		
33	G431800	LOCKNUT, 1/2-13 USS NYLOCK HEX	2		
34	G451802-8	BOLT, 5/8-11 X 1.3/4 LG. FLANGE	2	8	
35	S127976	ASSEMBLY, PLOW;RIGHT 45/18	1		--SEE NOTE 2--
36	S127977	ASSEMBLY, PLOW; LEFT 45/18 DEG.	1		--SEE NOTE 2--
37	S94230	ASSEMBLY, 27.1/8 LG COULTER SHANK	2		

--SEE NOTE 1--		
ITEM	DESCRIPTION	KIT
127918	SHANK, LEFT 40	71121
127919	SHANK, RIGHT 40	71121
--SEE NOTE 2--		
S127974	ASSY, PLOW; RIGHT 45/23	71131
S127975	ASSY, PLOW; LEFT 45/23	71131
S127968	ASSY, PLOW; RIGHT 37/18	71119
S127969	ASSY, PLOW; LEFT 37/18	71119
S127970	ASSY, PLOW; RIGHT 40/20	71121
S127971	ASSY, PLOW; LEFT 40/20	71121

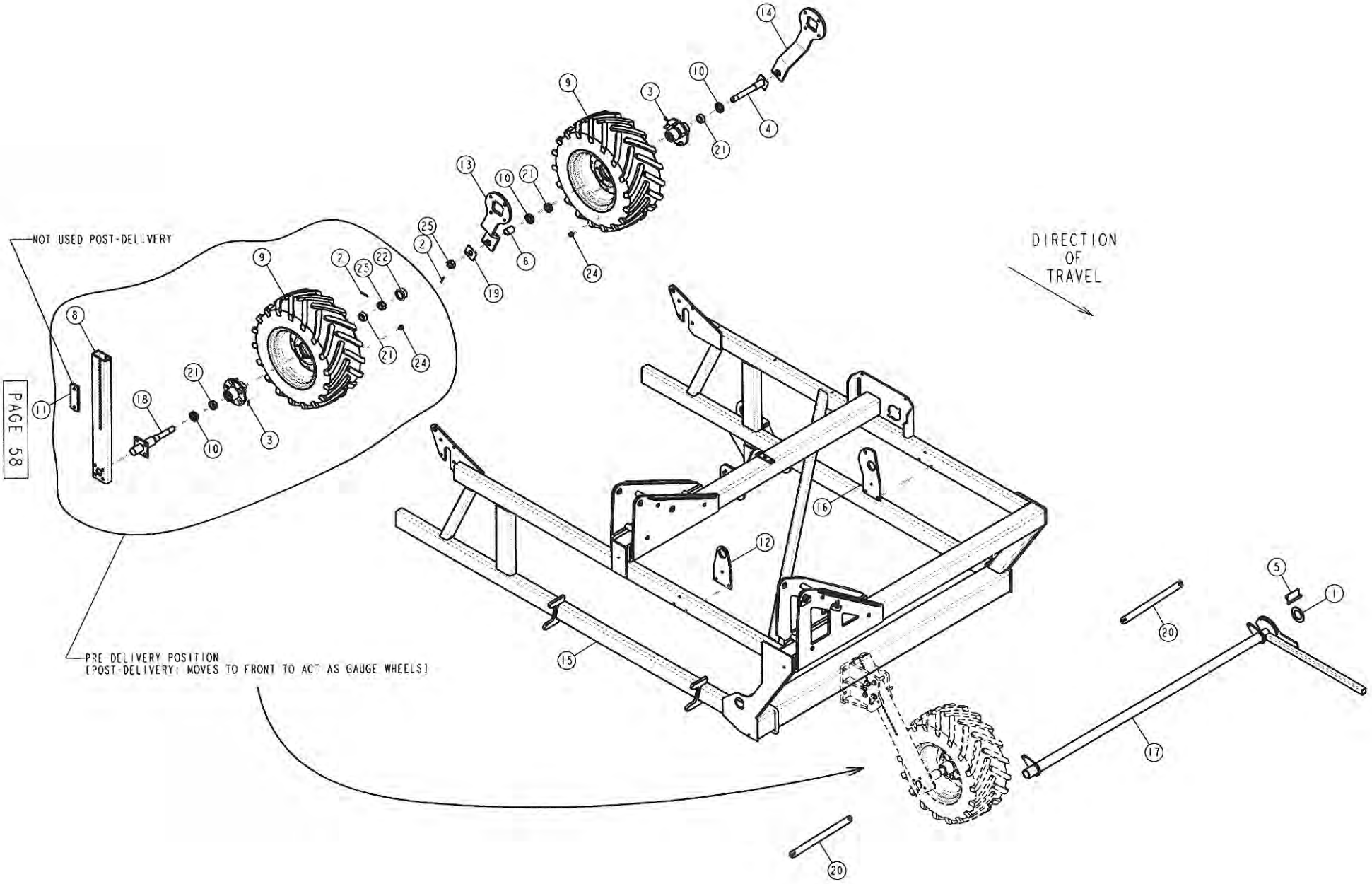
NOT USED POST-DELIVERY
PRE-DELIVERY POSITION
(POST-DELIVERY: MOVES TO FRONT TO ACT AS GAUGE WHEELS)
DIRECTION
OF
TRAVEL

PAGE 58

ADI-236 PT LEFT FRAME

ITEM	PART NUMBER	DESCRIPTION	QTY SHOWN	QTY REQ'D	COMMENTS
1	1866	WASHER, 3-1/4 OD x 2 ID	1		
2	2212	PIN, COTTER 5/32X1-1/2	2		
3	2247	FITTING, GREASE; 3/6 DRIVE-IN X 45 DEGREE	2		COMES WITH 80569A HUB
4	10953	SPINDLE, WHEEL MOUNT	1		
5	20421	PIN, SNAPPER; 3/8 DIA. X 3 LONG	1		
6	20915	SPACER, 1-9/16 LG.	1		
7	61979	U-BOLT,5/8-18, 5-1/16 X 7 W/NUTS	1		
8	62264	TUBE, GAUGE WHEEL MT	1		
9	80572	WHEEL ASSEMBLY, 23X10.5;6P;5 ON 4.5BC	2		
10	80640	SEAL, DOUBLE LIP 1-1/4" ID	3		
11	80738	MOUNT, WHEEL;TEMPORARY	1		
12	93819	MOUNT, CONVEYOR LIFT	1		
13	94195	PLATE, GAUGE WHEEL FORK	1		
14	94196	PLATE, GAUGE WHEEL FORK	1		
15	94773	FRAME, ADI-236 LFT WING	1		
16	94805	MOUNT, CONVERYOR LIFT; RT	1		
17	94806	LIFT, 236 WING; RIGHT	1		
18	100019	SPINDLE, DIGGER FRT GAUGE	1		
19	127953	WASHER, WHEEL MOUNT	1		
20	128962	BRACKET, CONVERYOR HANGING	2		
21	80113B	CONE & ROLLER ASSEMBLY, FOR 1" SHAFT	4		
22	80113D	CAP, HUB	1		
23	80569A	ASSEMBLY, HUB & CUP; 5 BOLT	4	10	
24	92856D	NUT, 1/2-13 USS	6		
25	G272325	NUT, 1-14 SAE HEX SLOTTED	2		

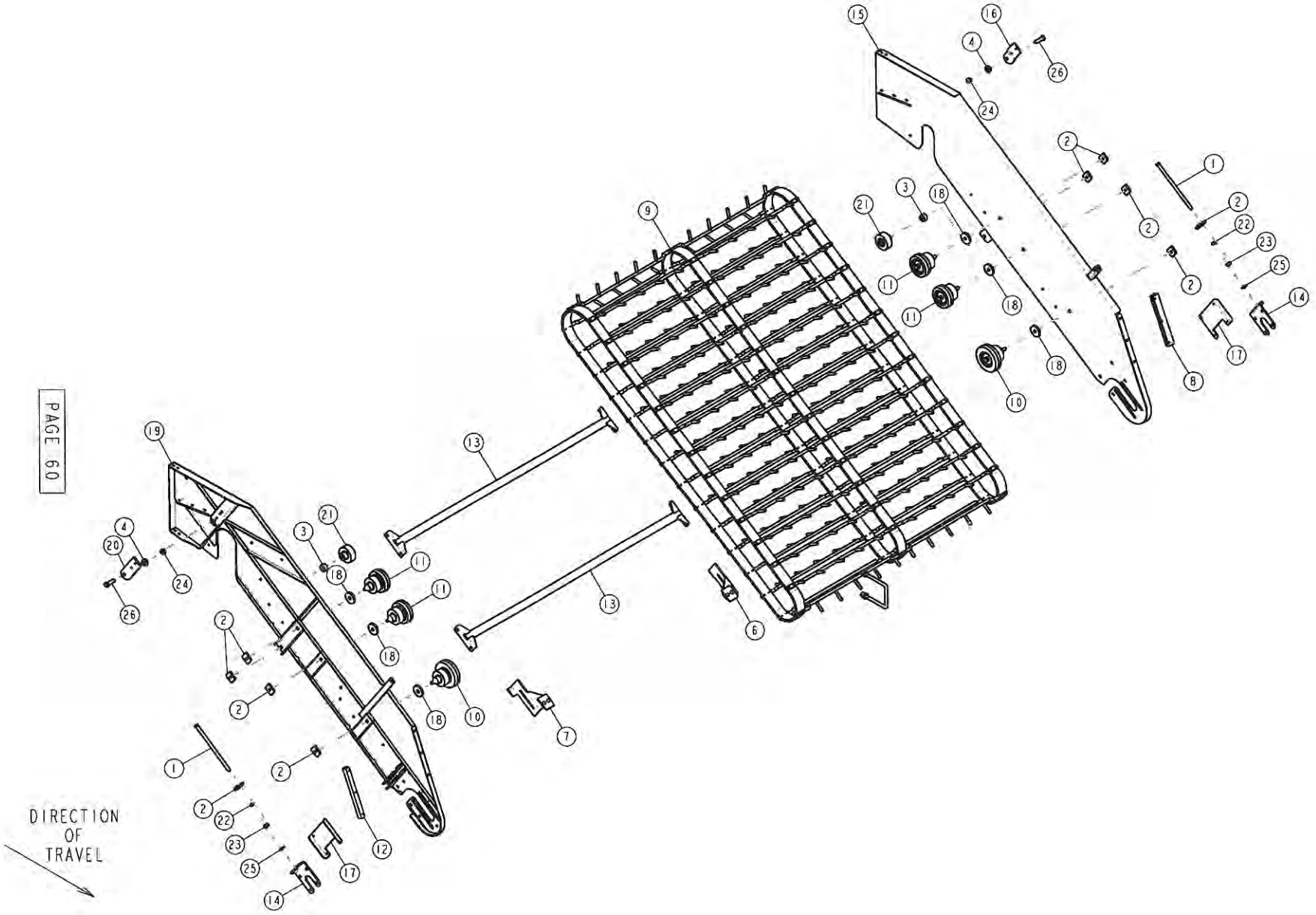
DIRECTION
OF
TRAVEL

ADI-236 PT LEFT CONVEYOR SECTION

ITEM	PART NUMBER	DESCRIPTION	QTY SHOWN	QTY REQ'D	COMMENTS
1	1841	ROD, ADJUSTING; BEARING	2		
2	2020	NUT, 5/8-11,2X1-3/4 IDLER ADJ	10		
3	20830	SPACER, 1.50 OD X .671 ID X .75 LONG	2		
4	51692	BUSHING, CONVEYOR PIVOT	2		
5	61979	U-BOLT,5/8-18, 5-1/16 X 7 W/NUTS	1		
6	70829	SCRAPER, LFT FRONT IDLER	1		
7	70830	SCRAPER, RT FRONT IDLER	1		
8	80455	BUMPER, DIGGER SIDE	1		
9	80523	CONVEYOR, BELT & BAR; 62.17/32 WIDE	1		
10	80530	ROLLER, SHAKER; 6"	2		
11	80531	SHAKER, ROLLER; 5"	4		
12	80728	BUMPER, DIGGER SIDE	1		
13	94240	BRACE, CROSS; 36" DIGGER	2		
14	127897	BRACKET, DIGGER SIDE	2		
15	127898	SIDE, DIGGER; OUTER LEFT	1		
16	127929	GUIDE, CONV.SIDE; RIGHT	1		
17	127972	PLATE, REINFORCEMENT	2		
18	127995	SPACER, SHAKER IDLER	6		
19	128946	SIDE, RIGHT NARROW	1		
20	128948	GUIDE, CONV.SIDE; STRAIGHT	1		
21	80531B	ROLLER, 3.5"	2		
22	G120240	NUT, 5/8-11 USS JAM	2		
23	G124589	NUT, 5/8-11 USS	2		
24	G124590	LOCKNUT, 5/8-11 NYLOCK	2		
25	G131016	WASHER, 5/8 SAE FLAT	2		
26	G271723	SCREW, 5/8-11 X 2 USS CAP	2		

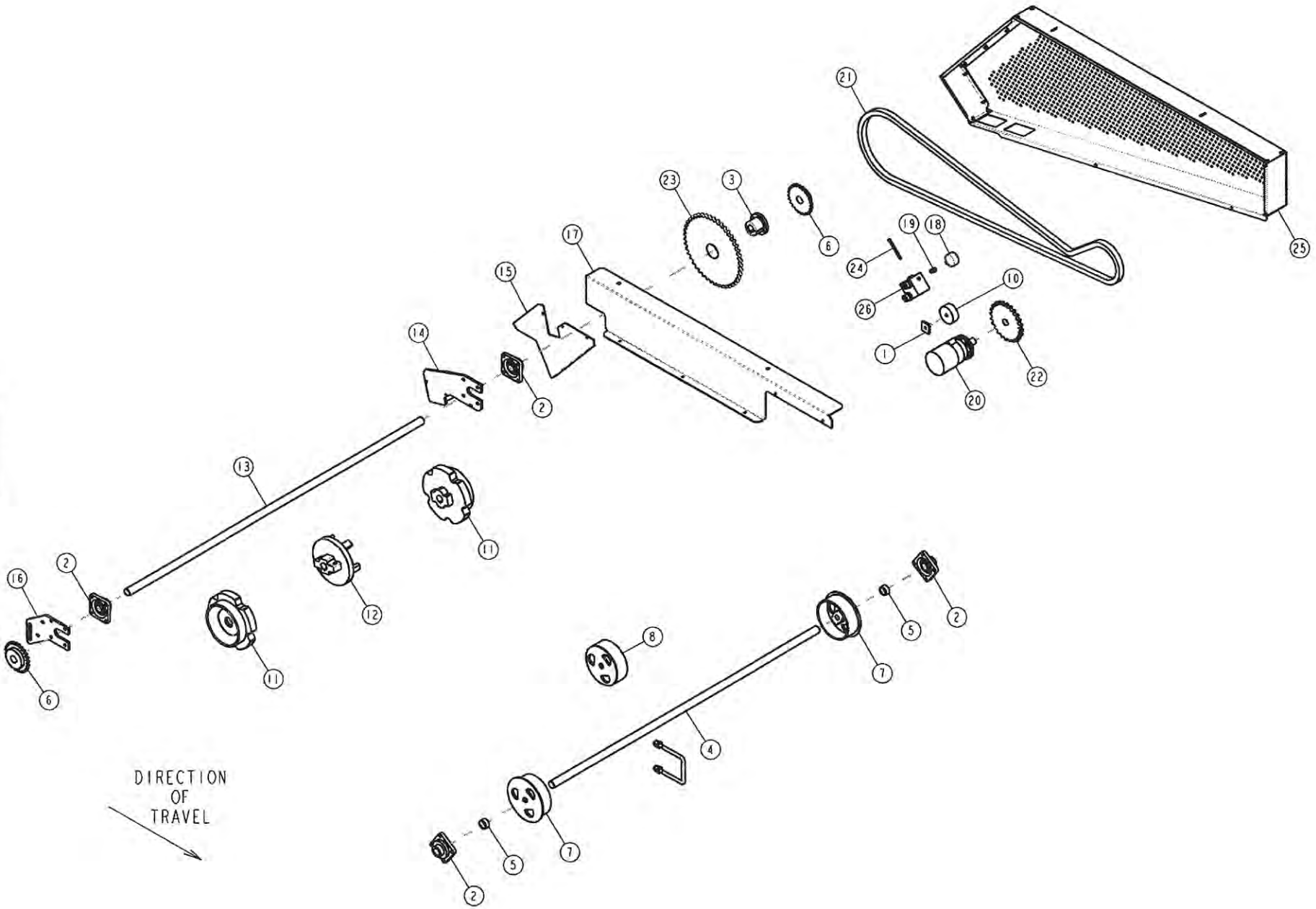
DIRECTION
OF
TRAVEL

ADI-236 PT GENERIC DRIVE; LEFT

ITEM	PART NUMBER	DESCRIPTION	QTY SHOWN	QTY REQ'D	COMMENTS
1	2020	NUT, 5/8-11,2X1-3/4 IDLER ADJ	1		
2	3253	BEARING, 1.7/16" 4-H; TRIPLE LIP	4		
3	5914	BUSHING, QI 1-7/16	1		
4	10936	SHAFT, IDLER; 36" DIGGER	1		
5	20957	BUSHING,DIGGER IDLER	2		
6	51079	SPROCKET, 60B24 F1-7/16; 2 SETSCREWS	2		
7	51661	IDLER, 2-PIECE FLANGED	2		
8	51663	IDLER, 2-PIECE NON-FLANGED	1		
9	61979	U-BOLT,5/8-18, 5-1/16 X 7 W/NUTS	1		
10	80491	SNUGULATOR, 1-3/8 W; 5/8 BORE	1		
11	80525	SPROCKET, SP150 URETHANE 1-7/16 BORE	2		
12	80641	IDLER, CAST SPLIT	1		
13	100027	SHAFT, DRIVE; 236 LEFT WING	1		
14	127996	BRACKET, IDLER DRIVE	1		
15	127998	SHIELD, INVERTER DRIVE; INNER	1		
16	128949	PLATE, IDLER BRACKET	1		
17	128982	SHIELD, MAIN DRIVE BACK	1		
18	140506	GAUGE, PRESSURE; 5000 PSI	1		
19	140545	HYDFITTING,-6 ORB X 1/4 NPTF	1		
20	140641	MOTOR, HYD.; 18.3 CU. IN. W/MANIFOLD MT.	1		
21	4365D-149	CHAIN,NO.80;147 PITS + OFFSET + CONNECTOR	1		
22	80B24-1-4	SPROCKET, 80B24;F1.1/4; 2 SETSCREWS	1		
23	80Q45	SPROCKET, 80Q45	1	4	
24	G11500721	SCREW, M8 X 100MM X 1.25 PITCH SOCKET HEAD	1		
25	S128965	ASSEMBLY, DIGGER MAIN SHIELD	1		
26	S140641	ASSEMBLY, MANIFOLD/GAUGE	1		

LEFT WING
INVERTER SET-UP

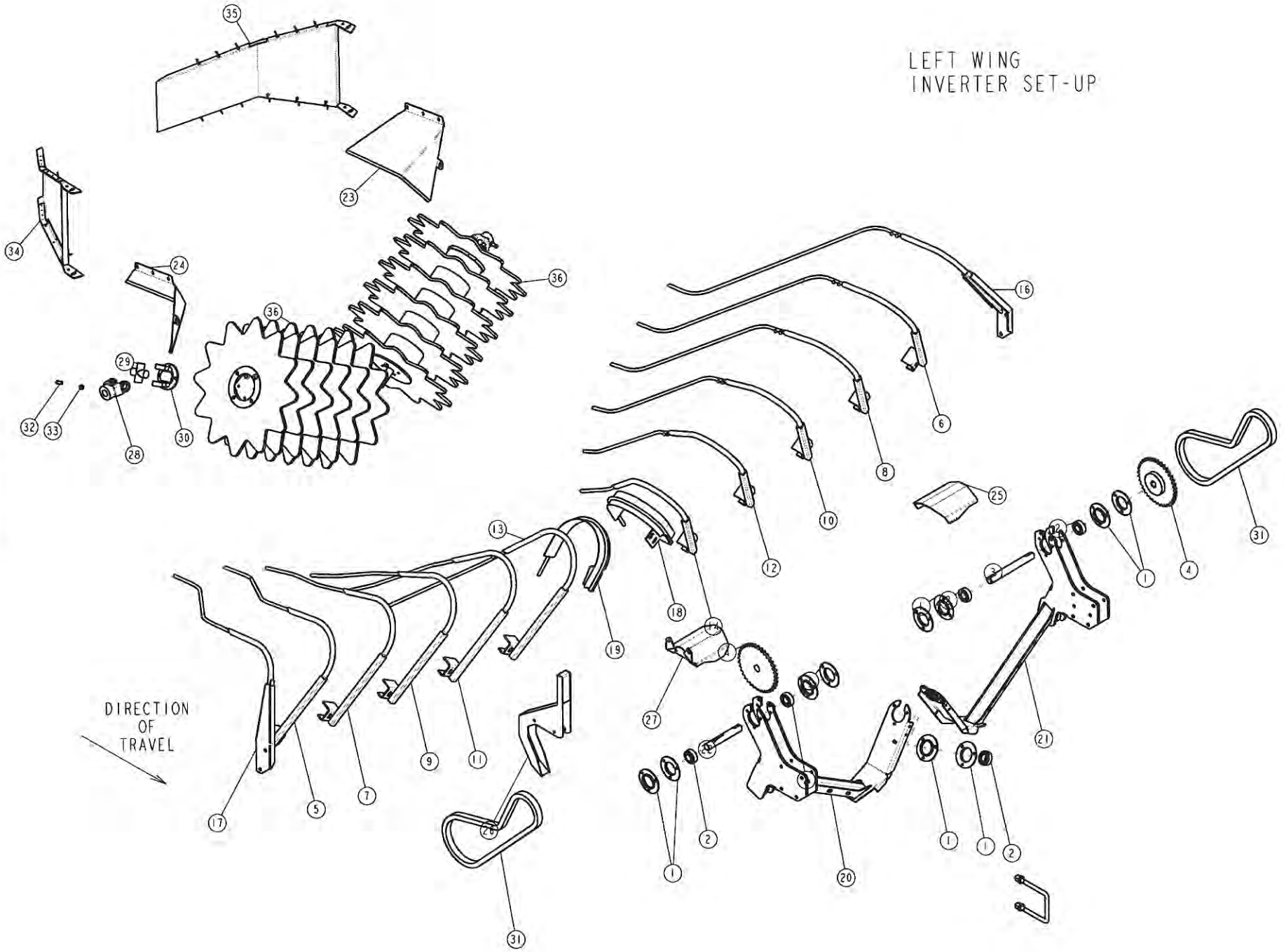

2-ROW 36" TWIN V INVERTER KIT - 71071

ITEM	PART NUMBER	DESCRIPTION	QTY SHOWN	QTY REQ'D	COMMENTS
1	3093	FLANGETTE, 62MS FOR 1.3/16 BEARING	12		
2	3096	INSERT, 1.3/16 REPLACEMENT BEARING	6		
3	10952	SHAFT, INVERTER OUTER LEFT	1		
4	51002	SPROCKET, 60B36 F1-3/16	2		
5	61949	ROD, INVERTER; #2 RIGHT "V"	1		
6	61950	ROD, INVERTER; #2 LEFT "V"	1		
7	61951	ROD, INVERTER; #3 RIGHT "V"	1		
8	61952	ROD, INVERTER; #3 LEFT "V"	1		
9	61953	ROD, INVERTER; #4 RIGHT "V"	1		
10	61954	ROD, INVERTER; #4 LEFT "V"	1		
11	61955	ROD, INVERTER; #5 RIGHT "V"	1		
12	61956	ROD, INVERTER; #5 LEFT "V"	1		
13	61957	ROD, INVERTER; #6 RIGHT "V"	1		
14	61958	ROD, INVERTER; #6 LEFT "V"	1		
15	61979	U-BOLT,5/8-18, 5-1/16 X 7 W/NUTS	1		
16	62037	ROD, #1 INVERTER; LEFT "V"	1		
17	62038	ROD, #1 INVERTER; RIGHT "V"	1		
18	62099	ROD, INNER; RIGHT W/SHIELD	1		
19	62100	ROD, INNER; LEFT W/SHIELD	1		
20	94484	MOUNT, INVERTER; 36 RIGHT	1		
21	94485	MOUNT, INVERTER; 36 LEFT	1		
22	100030	SHAFT, V INVERTER	1		
23	128137	SHIELD, LFT VINE DEFLECTOR	1		
24	128138	SHIELD, RT VINE DEFLECTOR	1		
25	128139	SHIELD, U-JOINT; OUTER LEFT	1		
26	129004	SHIELD, INVERTER DRIVE; NARROW	1		
27	129005	SHIELD, U-JOINT, OUTER RIGHT	1		
28	11377A	YOKE, 1-3/16 BORE X 3.25 LENGTH	2		
29	11377B	SPIDER, 1-1/4 X 3-7/32 OA	2		
30	11377C	YOKE, 4-3/8 FLANGE	2		
31	4043D-84	CHAIN, #60,83PITS+CONN	2		
32	G139454	SETSCREW, 7/16-14 X 1 LG.;SQ. HEAD	2		
33	G271509	NUT, 7/16-14 USS JAM	2		
34	S128152	FENDER,RIGHT	1		
35	S128153	FENDER; LEFT	1		
36	S94455	ASSEMBLY, SOLID "V" INV. ROTOR; 36"	2		

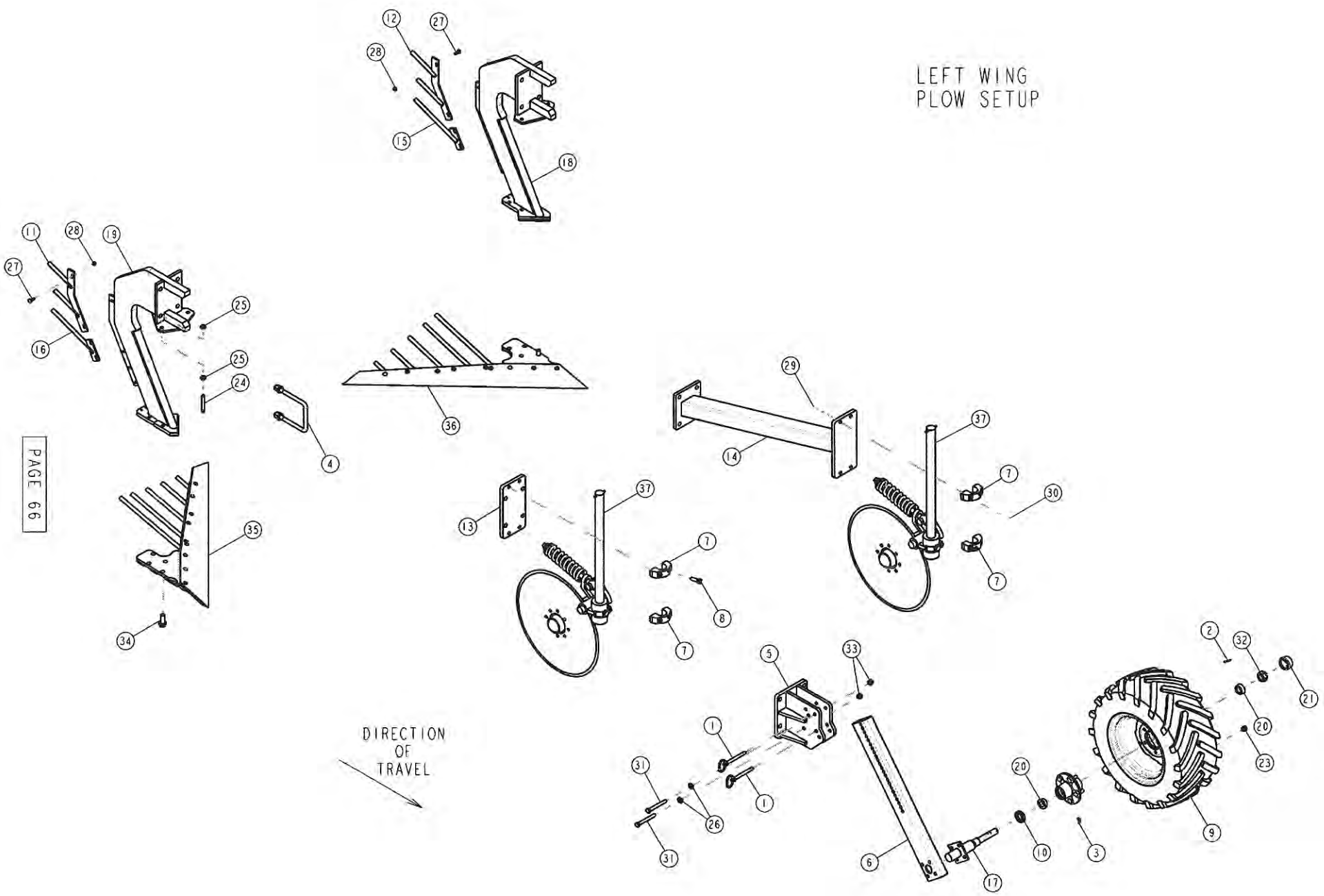
LEFT WING
PLOW SETUP
DIRECTION
OF
TRAVEL

236/240 PULL TYPE LEFT PLOW/COULTER KIT

ITEM	PART NUMBER	DESCRIPTION	QTY SHOWN	QTY REQ'D	COMMENTS
1	1673	PIN, HITCH; 1/2 DIA. X 4-3/4 LONG	2		
2	2212	PIN, COTTER 5/32X1-1/2	1		
3	2247	FITTING, GREASE; 3/6 DRIVE-IN X 45 DEGREE	1		
4	61979	U-BOLT,5/8-18, 5-1/16 X 7 W/NUTS	1	8	
5	62263	MOUNT, FRT GAUGE WHEEL	1		
6	62264	TUBE, GAUGE WHEEL MT	1		
7	80500	CLAMP, COULTER, 1.1/2	4		
8	80501	SETSCREW,1/2-13X1-1/2 SQ HEAD	2		
9	80572	WHEEL ASSEMBLY, 23X10.5;6P;5 ON 4.5BC	1		
10	80640	SEAL, DOUBLE LIP 1-1/4" ID	1		
11	93692	MOUNT, GUIDE ROD; LEFT	1		
12	93693	MOUNT, GUIDE ROD; RIGHT	1		
13	94002	MOUNT, YETTER COULTER	1		
14	94226	MOUNT, ANGLED COULTER	1		
15	94348	ROD, 3RD; LEFT	1		
16	94349	ROD, 3RD; RIGHT	1		
17	100019	SPINDLE, DIGGER FRT GAUGE	1		
18	127920	SHANK, LEFT DIGGER; 45	1		
19	127921	SHANK, RIGHT DIGGER; 45	1		
20	80113B	CONE & ROLLER ASSEMBLY, FOR 1" SHAFT	2		
21	80113D	CAP, HUB	1		
22	80569A	ASSEMBLY, HUB & CUP; 5 BOLT	2		
23	92856D	NUT, 1/2-13 USS	5		
24	G110456	SETSCREW, 1/2-13 X 3 SQ. HEAD	1	4	
25	G120238	NUT, 1/2 USS JAM	2	8	
26	G120396	WASHER, 1/2 SAE FLAT	2		
27	G126358	BOLT, 5/16-18 X 1 CARRIAGE; GRADE 5	2	8	
28	G128001	NUT, 5/16-18 SERRATED FLANGE	2	8	
29	G128004	NUT, 1/2-13 SERRATED FLANGE	2		
30	G180188	SCREW, 1/2-13 X 2-3/4 USS CAP	2		
31	G180194	SCREW, 1/2-13 X 4 LG. HEX HEAD CAP	2		
32	G272325	NUT, 1-14 SAE HEX SLOTTED	1		
33	G431800	LOCKNUT, 1/2-13 USS NYLOCK HEX	2		
34	G451802-8	BOLT, 5/8-11 X 1.3/4 LG. FLANGE	2	8	
35	S127976	ASSEMBLY, PLOW;RIGHT 45/18	1		
36	S127977	ASSEMBLY, PLOW; LEFT 45/18 DEG.	1		
37	S94230	ASSEMBLY, 27.1/8 LG COULTER SHANK	2		

--SEE NOTE 1--		
ITEM	DESCRIPTION	KIT
127918	SHANK, LEFT 40	71121
127919	SHANK, RIGHT 40	71121
--SEE NOTE 2--		
S127974	ASSY, PLOW; RIGHT 45/23	71131
S127975	ASSY, PLOW; LEFT 45/23	71131
S127968	ASSY, PLOW; RIGHT 37/18	71119
S127969	ASSY, PLOW; LEFT 37/18	71119
S127970	ASSY, PLOW; RIGHT 40/20	71121
S127971	ASSY, PLOW; LEFT 40/20	71121

⚠ WARNING

Do Not Operate unless all Safety Shields & Guards are in place.

8547

1

⚠ DANGER

While in Operation, Do Not Climb on this machine. Do Not Place Hands behind Shields.

8182

2

Remember

⚠ SAFETY ⚠

Read Operators Manual Before Starting

8189

3

⚠ CAUTION

Do Not Operate this machine until you have read and understand the operators manual. If you do not have a copy of the operators manual contact your dealer or our factory Immediately.

Amadas Industries
1100 Holland Rd./Suffolk, VA 23434
757-539-0231
Or
1701 S. Slappey Blvd./Albany, GA31701 229-439-2217

8191

4

⚠ CAUTION

1) Keep all shields in place while machinery is in operation.
2) Disengage power before proceeding to adjust, lubricate, clean, unclog, or otherwise work on the machine unless specifically recommended in the operators manual.
3) Wait for all motion to stop before servicing this machine.
4) Keep hands, feet, and clothing away from moving parts.
5) Keep off equipment unless seat or platform for operator is provided.
6) Keep all other persons off
7) Make certain everyone is clear of machinery before engine or operation.

8190

5

AD1-8-ROW PULL TYPE DECAL SECTION

ITEM	PART NUMBER	DESCRIPTION	QTY SHOWN	QTY REQ'D	COMMENTS
1	8547	DECAL, WARNING: DO NOT OPERATE...SHIELDS	1	4	
2	8182	DECAL, "DANGER" DO NOT CLIMB	1	2	
3	8189	DECAL, !SAFETY! READ OP. MANUAL	1	2	
4	8191	DECAL, CAUTION: READ OPERATOR'S MANUAL	1		
5	8190	DECAL, "CAUTION" (LIST)	1		
		THE FOLLOWING DECALS ARE USED BUT ARE NOT SHOWN			
	80619	DECAL, AD1-8 YIELDSAVER; WHITE/RED		2	
	80468	DECAL, "AMADAS"; 3" X 26.5"; WHITE		2	
	80471	DECAL, 47" FLAG		2	
	80473	DECAL, 26" AMADAS W/FLAG		2	
	80548	DECAL, INVERTER ROD SETUP		1	

NUMERICAL PARTS INDEX

PART NO.	PAGE
1590	39,45,47
1673	39,57,67
1836	39
1841	7,51,61
1866	49,59
2020	7,51,53
2020	61,63
2049	41
2196	41
2212	39,49,57
2212	59,67
2247	49,57,59,67
2908	41
3093	17,55,65
3096	17,55,65
3253	13,53,63
3263	45,47
5122	13
5914	53,63
8017	5
8182	69
8189	69
8190	69
8191	69
8547	69
10936	13,53,63
10950	17
10952	55,65
10953	49,59
11377	19
12918	67
14832	41
14936	5
15465	21
15468	21
15929	5
15930	5
16146	43
16395	21
16409	5
16900	41
20386	45,47
20421	49,59
20830	7,51,61
20845	39
20846	37
20915	49,59
20937	19
20938	19
20939	19
20957	13,53,63
20984	45,47
20991	45,47
21012	39
21014	45,47
21017	45,47
21018	39
21020	45,47
21025	9
21026	5
51002	17,55,65
51079	13,53,63
51661	13,53,63
51663	13,53,63
51691	13
51692	7,51,61
51695	13
51787	13
61949	17,55,65
61950	17,55,65
61951	17,55,65
61952	17,55,65
61953	17,55,65
61954	17,55,65
61955	17,55,65
61956	17,55,65
61957	17,55,65
61958	17,55,65
61979	25,29,33,37
61979	39,49,51,53
61979	57,59,61,63
61979	65,67
62037	17,55,65
62038	17,55,65
62099	17,55,65
62100	17,55,65
62263	39,57,67
62264	39,49,57
62264	59,67
62319	47
62320	45
62353	41
62362	17
70829	7,51,61
70830	7,51,61
71069	23
71071	15
71097	23
71119	31
71121	35
71122	31
71123	35
71125	15
71128	27
71131	27
80403	39
80408	21
80455	51,61
80458	5
80460	5
80468	69
80471	69
80473	69
80491	53,63
80498	19
80500	25,29,33,37
80500	57,67
80501	25,29,33,37
80501	57,67
80511	39
80522	9
80523	7,9,11
80523	51,61
80525	13,53,63
80530	7,51,61
80531	7,51,61
80548	69
80572	39,49,57
80572	59,67
80573	9
80619	69
80640	39,49,57
80640	59,67
80641	13,53,63
80728	7,51,61
80729	5
80738	49,59
80749	41
80750	5
80751	5
80752	5
80753	5
80754	5
93692	25,29,33
93692	57,67
93693	25,29,33
93693	57,67
93819	5,49,59
94002	25,29,33,37
94002	57,67
94195	49,59
94196	49,59
94226	25,29,33,37

PART NO.	PAGE
94226	57,67
94240	7,51,61
94348	25,29,33
94348	57,67
94349	25,29,33
94349	57,67
94455	19
94466	37
94467	37
94468	37
94469	37
94470	37
94471	37
94481	17
94484	17,55,65
94485	17,55,65
94754	39
94755	39
94773	43,47,59
94774	43,45,49
94800	49
94801	49
94805	59
94806	59
94808	39
94809	39
94943	5
94947	5
94948	5
94949	5
94954	5,43,45,47
94955	5
94977	25,29,33,37
100019	39,49,57
100019	59,67
100027	53,63
100030	17,55,65
100047	5
100050	5
100051	5
100054	13
100055	13
121106	17
127436	5
127835	39,51
127897	7,51,61
127898	61
127918	37,57
127919	37,57,67
127920	25,29,33
127920	57,67
127921	25,29,33
127921	57,67
127928	51
127929	61
127953	49,59
127972	7,51,61
127995	7,51,61
127996	63
127998	63
128006	13
128137	17,55,65
128138	17,55,65
128139	65
128140	55
128168	17
128169	17
128303	19
128304	19
128323	39
128946	7,61
128947	7,51
128948	7,51,61
128949	13,53,63
128960	53
128962	49,59
128964	13
128982	63
128983	53
128991	53
128996	5
129004	17,55,65
129005	17,65
129006	17,55
129202	17
129228	5
140125	41
140341	13,41,43
140457	41
140506	53,63
140545	53,63
140641	13,43,53,63
140644	43
140672	13
140841	41
140842	41
140909	43,45,47
140916	13,43
140923	43
140924	43
140927	13,43
140974	43
140975	43
140976	43
140977	43
140978	43
11377A	17,55,65
11377B	17,55,65
11377C	17,55,65
15464C	21
4043D-84	17,55,65
4293-21	5
4293-39	5
4365D-101	13
4365D-149	53,63
80113B	39,49,57
80113B	59,67
80113D	39,49,57
80113D	59,67
80522C	9
80522E	9
80522F	9
80522G	11
80522H	11
80522K	9
80522L	9
80522M	9
80522N	9
80523A	11
80523B	11
80531B	7,51,61
80569A	39,49,57
80569A	59,67
80750A	5
80750INC	5
80B24-1-4	13,53,63
80Q45	53,63
92856D	39,49,57
92856D	59,67
EADI-236PT-	3
EADI-236PT-	3
G102924	19
G110456	25,29,33
G110456	57,67
G11500721	13,53,63
G120214	5
G120238	25,29,33
G120238	57,67
G120240	7,51,61
G120382	19
G120396	39,57,67
G121358-8	39
G124589	7,51,61

NUMERICAL PARTS INDEX

PART NO.	PAGE
G124590	7,51,61
G124944	39
G126358	25,29,33
G126358	37,57,67
G128001	25,29,33
G128001	37,57,67
G128004	25,29,33
G128004	37,57,67
G131016	7,51,61
G131019	5
G131021	47
G139454	17,19,55,65
G144858	19
G180077	5
G180085	5
G180122	19
G180124	19
G180188	25,29,33
G180188	57,67
G180194	39,57,67
G271509	17,19,55,65
G271723	7,51,61
G271756-8	39
G272324	5
G272325	39,49,57
G272325	59,67
G431798	5
G431800	39,57,67
G433156	5
G433163	37
G451802-8	25,29,33
G451802-8	37,57,67
G9419533	45,47
J38H1163	13
J38H1317	13
JAH116104	13
JH104418	13
S127968	33,57,67
S127969	33,57,67
S127970	37,57,67
S127971	37,57,67
S127974	29,57,67
S127975	29,57,67
S127976	25,57,67
S127977	25,57,67
S128152	17,55,65
S128153	17,55,65
S128965	63
S128966	53
S128989	13
S140641	43,65
S140927	43,53
S15569-24	21
S62319	43,45
S62320	47
S80499	25,29,33,37
S94230	25,29,33
S94230	37,57,67
S94455	17,55,65
X708	39

PART NO.	PAGE

ONE-YEAR LIMITED WARRANTY
For AMADAS INDUSTRIES DIGGER / INVERTERS

A. General Provisions

The Warranties described below are provided by AMADAS INDUSTRIES ("AMADAS") through its authorized dealers to the original purchaser of each new AMADAS Digger / Inverter. AMADAS will repair or replace, at its option, any part covered under warranty which is found to be defective in material or workmanship during the applicable period of warranty. This warranty is applicable only to the cost of the part replaced or repaired and does not cover labor costs involved in installing the replaced or repaired defective part.

B. What is Warranted?

All parts of any new AMADAS Digger / Inverter are warranted for 12 months. The warranty period will begin when the Digger / Inverter is delivered to the purchaser. AMADAS will repair or replace, at its option, any new part or component under the above warranty, if a defect in material or workmanship appears in such part or component and is reported to AMADAS before the expiration of the applicable equipment warranty.

Used equipment is not warranted by AMADAS unless it is specifically covered by a separate warranty document. The above warranties cover only defective material and workmanship. The warranties do not cover any depreciation or failure caused by normal wear, lack of proper maintenance or use, misuse, lack of proper protection during storage, or accident. The purchaser shall pay all costs of routine maintenance and/or replacement of maintenance and wear items.

C. Unapproved Service or Modification

All Obligations of AMADAS under this warranty are terminated if the Digger / Inverter is modified or altered in ways not approved by AMADAS.

D. Securing Warranty Service

To secure warranty service, the purchaser must (1) report the product defect and request repair within the applicable warranty period, (2) present evidence of the date of delivery of the Digger / Inverter, and (3) make the Digger / Inverter available to an AMADAS authorized dealer within a reasonable period of time.

E. No Dealer Warranty

The selling dealer makes no warranty of his own on any item warranted by AMADAS, and makes no warranty on other items. The dealer has no authority to make any representation or promise on behalf of AMADAS, or to modify the terms or limitations of this warranty in any way.

F. What are your Responsibilities?

a. Read the operator's manual before operating the equipment.
b. Perform all necessary maintenance as described in the operator's manual.
c. Deliver the machine to an AMADAS authorized dealer at your expense during normal working hours for any needed warranty services.
d. Contact an AMADAS authorized dealer promptly on any claim for warranty service.
e. Sign the AMADAS machinery delivery form, which will be given to you by the dealer.

G. Disclaimer

There are no warranties that extend beyond the description here. **ANY WARRANTIES OF MERCHANTABILITY AND FITNESS FOR ANY PARTICULAR PURPOSE ARE SPECIFICALLY DISCLAIMED AS ARE ALL OTHER REPRESENTATIONS TO THE PURCHASER.** AMADAS specifically excludes any liability on behalf of the company for any incidental or consequential damages including, but not limited to, crop loss, loss of profits, rental of substitute equipment, or other commercial losses. AMADAS shall not be responsible for expenses or inconveniences that you might incur or experience with respect to the AMADAS Digger / Inverter nor shall AMADAS be liable for defects, damage, or failures caused by improper storage, unreasonable use, or abuse, or accident, including the failure to provide reasonable and specified maintenance. This warranty applies only to the original purchaser of the equipment. Because some states do not allow the exclusion of limitations of incidental or consequential damages, the above limitation may not apply to you. This warranty gives you specific legal rights. You may also have other rights, which vary from state to state. Where there is a conflict between a provision of this warranty and the provision of any state, the state legislation prevails.

AMADAS