ADI-436 & ADI-438
4-ROW DIGGER / INVERTER

5th Edition **CAT441**

Beginning Serial No: 480000

Owner's Name _____

Dealer's Name _____

Serial Number _____ **Model No.** _____

Date Purchased _____

TABLE OF CONTENTS

CAT441
5th Edition
April 1, 2010

ADI-436 & ADI-438
4-Row Digger/Inverter

Beginning Serial No. 480000

	Page
4-Row Frame	3
Right/Left Conveyor Side	5
Belt Connecting Kit 70808	7
80523 Rod Replacement - Kit 70805	9
80522 Rod Replacement - Kit 70804	11
Generic Drive	13
Twin "V" Inverter Kit; Solid	15
Solid "V" Inverter Rotor; 36"	17
Solid "V" Inverter Rotor; 38"/40"	19
ADI-436 Straight Inverter	21
ADI-436 Inverter Rotor Assembly	23
ADI-438 Straight Inverter	25
ADI-438 Inverter Rotor Assembly	27
S15465-1 Speed Indicator	29
70754 Plow/Coulter Set-Up; 72" & 76" Frame, 37 Deg. Sweep	31
70755 Plow/Coulter Set-Up; 72" & 76" Frame, 40 Deg. Sweep	33
70756 Plow/Coulter Set-Up; 23 Deg. Blade Angle	35
70760 Plow/Coulter Set-Up; 18" Deg Blade Angle	37
Single Coulter Assembly	39
S61982-1 Dual Coulter Assembly	41
70769 4-Row Hitch Extension Kit - Optional	43
Decals	45
4-Row 36" & 38" Sandwich Inversion Kit	47
S94276RT and/or S94276LT Sandwich Conveyor Frame	49
0352 - Belt Connecting Kit - 19-3/4" Sandwich	51
0354 - Rod Replacement Kit - 19-3/4" Sandwich	53
Conversion Kit From Standard Sandwich to Virginia Sandwich	55
ADI-436/438 Tenting Inversion Kits	57
ADI-436 Tenting Rotor - S61973-2	59
ADI-438 Tenting Rotor - S61974-2	61
4-Row Digger Kit Identification Chart	62
Numerical Parts Index	63
Warranty	

NOTES

The Terms "Left" and "Right" used in the description of parts are determined by facing the direction of travel of the machine.
"A/R" found in the "No. Req'd" column denotes "As Required".
"OPT" found in the "No. Req'd" column denotes "Optional".

1100 Holland Road Suffolk, VA 23434 U.S.A.
(757) 539-0231 / Fax - (757) 934-3264

1701 S. Slappey Blvd./P.O. Box 3687 Albany, GA 31706
(229) 439-2217 / Fax (229) 439-9343

AMADAS INDUSTRIES

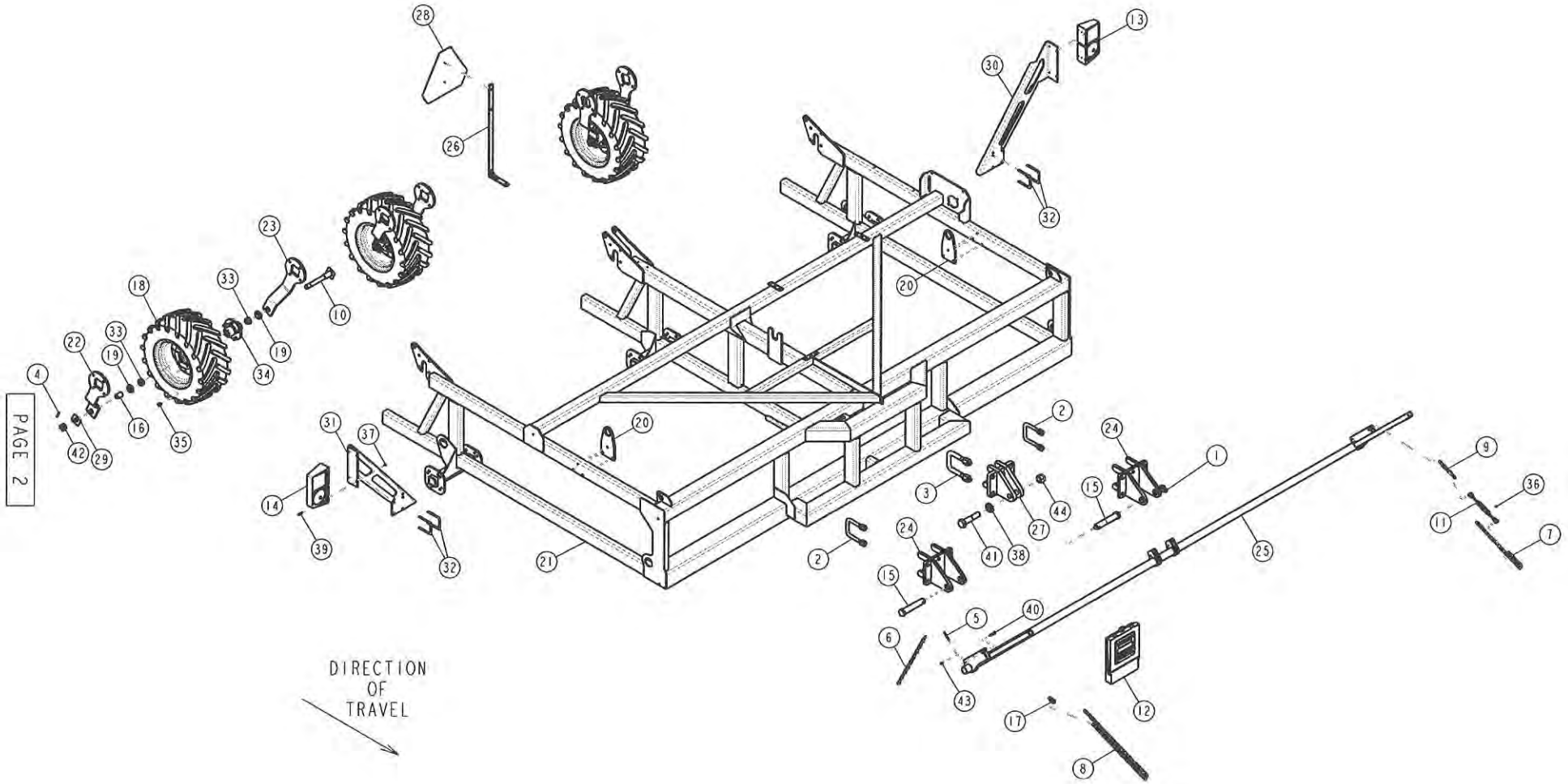
PAGE 2
DIRECTION
OF
TRAVEL

ADI-436 & ADI-438 4-ROW FRAME SECTION

ITEM	PART NUMBER	DESCRIPTION	QTY SHOWN	QTY REQ'D	COMMENTS
1	1465	PIN, LYNCH; 7/16 X 2 HD	1		
2	1836	U-BOLT, 3/4-10 X 6 LG. X 4.1/16 W	2		
3	1848	U-BOLT, 1-12 X 4.0625 X 6.25 W/GR9 NUT & WASHER	1		
4	2212	PIN, COTTER 5/32X1-1/2	3		
5	2244	PIN, ROLL 1/4" X 2.1/2" LG.	1		
6	4293-18	CHAIN,3/16 COIL; 18 LINKS	1		
7	4293-23	CHAIN,3/16 COIL; 23 LINKS	1		
8	4293-39	CHAIN,3/16 COIL; 39 LINKS	1		
9	4293-5	CHAIN,3/16 COIL; 5 LINKS	1		
10	10953	SPINDLE, WHEEL MOUNT	3		--SEE NOTE 3--
11	11375	TURNBUCKLE, 3/4 X 29 MIN. TO 47 MAX. JAW&JAW	1		
12	13661	BOX, MANUAL	1		
13	15929	LIGHT, DUAL LAMP W/BRAKE FCN; LH	1		--SEE NOTE 4--
14	15930	LIGHT, DUAL LAMP W/BRAKE FCN; RH	1		--SEE NOTE 4--
15	20845	PIN, HITCH; CAT III	2		
16	20915	SPACER, 1-9/16 LG.	3		--SEE NOTE 3--
17	80458	SNAP, SPRING; 1/4"	1		
18	80572	WHEEL ASSEMBLY, 23X10.5;6P;5 ON 4.5BC	3		--SEE NOTE 3--
19	80640	SEAL, DOUBLE LIP 1-1/4" ID	6		
20	93819	MOUNT, CONVEYOR LIFT	2		
21	94155	FRAME, 4-ROW; ADI-436	1		--SEE NOTE 1--
22	94195	PLATE, GAUGE WHEEL FORK	3		
23	94196	PLATE, GAUGE WHEEL FORK	3		
24	94221	HITCH, LOWER	2		
25	94247	LIFT, 4-ROW; 72" SPACING	1		--SEE NOTE 2--
26	94277	MOUNT, SMV DECAL	1		
27	94344	HITCH, HEAVY UPPER	1		
28	121106	DECAL, SMV W/METAL BACKING PLATE	1		
29	127953	WASHER, WHEEL MOUNT	3		
30	128178	MOUNT, LIGHT LH	1		
31	128179	MOUNT, LIGHT RH	1		
32	128180	U-BOLT, LIGHT MOUNT	4		
33	80113B	CONE & ROLLER ASSEMBLY, FOR 1" SHAFT	6		
34	80569A	ASSEMBLY, HUB & CUP; 5 BOLT	3		
35	928560	NUT, 1/2-13 USS	3		
36	G124818	NUT, 1/4-20 USS JAM	1		
37	G126178	NUT,1/4-20 SERRATED FLANGE	1		
38	G131021	WASHER, 1-1/4 SAE FLAT	1		
39	G180024	SCREW, 1/4-20 X 1-1/4 USS CAP	1		
40	G180085	SCREW, 5/16-18 X 1-3/4 USS CAP	2		
41	G271953	SCREW, 1-1/4 X 5.1/2 USS CAP, GRD 8	1		
42	G272325	NUT, 1-14 SAE HEX SLOTTED	3		
43	G431798	LOCKNUT, 5/16-18 USS NYLOCK HEX	1		
44	G9419533	LOCKNUT, 1-1/4-7, GRADE 8	1		

--NOTE 1--			
PART NUMBER	DESCRIPTION	QTY REQ'D	COMMENTS
94155	FRAME, 4-ROW; 72" CENTER	1	ADI-436
94148	FRAME, 4-ROW; 76" CENTER	1	ADI-438
--NOTE 2--			
94247	LIFT, 4-ROW; 72" SPACING	1	ADI-436
94220	LIFT, 4-ROW; 76" SPACING	1	ADI-438
--NOTE 3--			
80475	WHEEL & TIRE FOR <430000 SERIAL # MACHINES; 2004 DIGGERS	3	
20798	SPACER FOR <430000 SERIAL # MACHINES; 2004 DIGGERS	3	
10927	SPINDLE FOR <430000 SERIAL # MACHINES; 2004 DIGGERS	3	
80569A	HUB & CUP FOR <430000 SERIAL # MACHINES; 2004 DIGGERS	3	
G120384	LOCKWASHER, 1/2 FOR <430000 SERIAL # MACHINES; FOR 2004 DIGGERS (NOT SHOWN)	12	
G181698	SCREW, 1/2-20 X 1/4 CAP FOR <430000 SERIAL # MACHINES;2004 DIGGER (NOT SHOWN)	12	
--NOTE 4--			
14936	TIE, 8" PUSH-MT. BLK BARBED TIP	20	
16334	HARNESS, WIRING DIGGER LIGHTS	1	

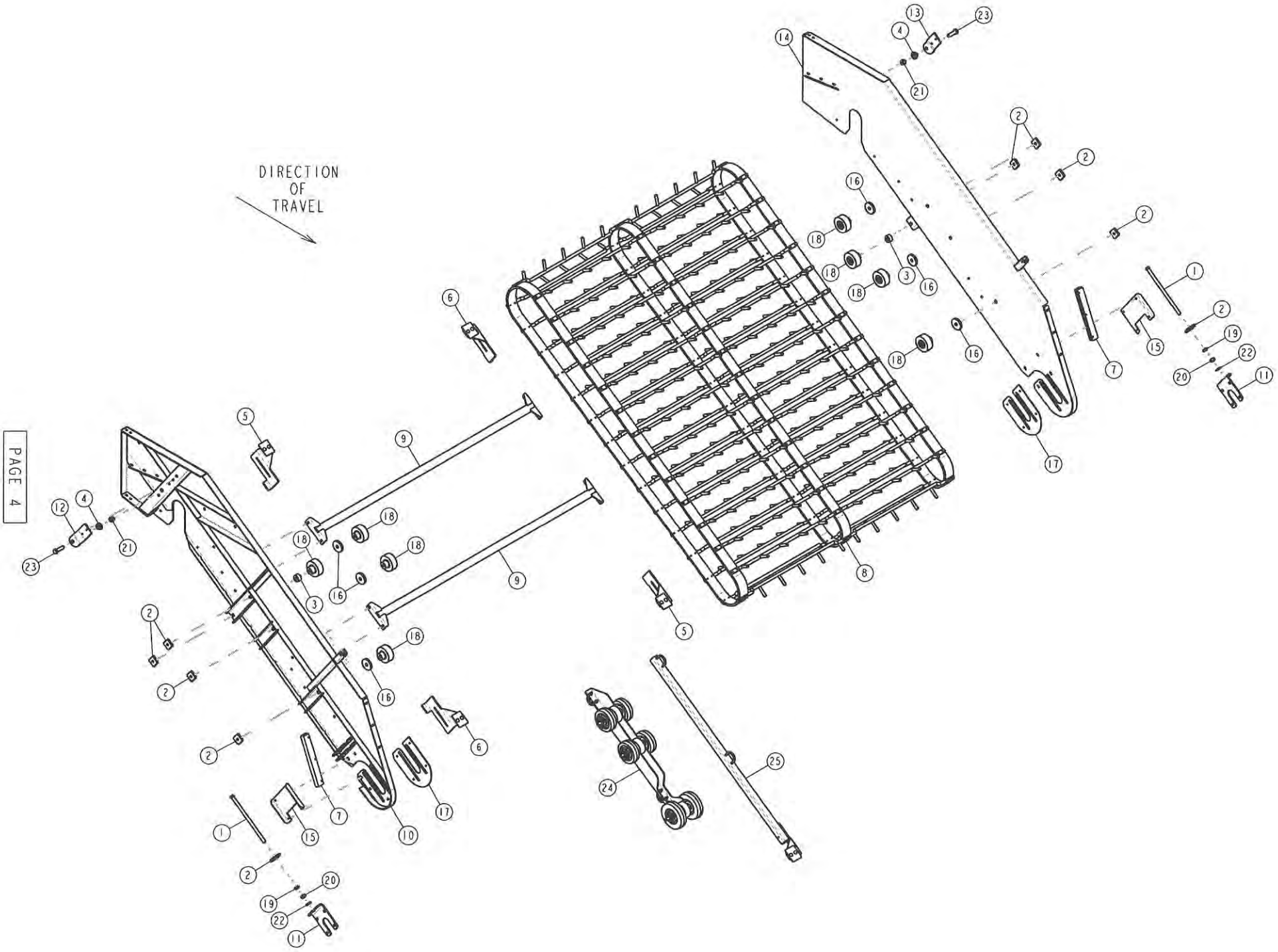
DIRECTION
OF
TRAVEL

AD1-436,-438,-636,-638,-640 RIGHT/LEFT CONVEYOR SIDE

RIGHT CONVEYOR SIDE

ITEM	PART NUMBER	DESCRIPTION	QTY SHOWN	QTY REQ'D	COMMENTS
1	1841	ROD, ADJUSTING; BEARING	2		
2	2020	NUT, 5/8-11,2X1-3/4 IDLER ADJ	10		
3	20830	SPACER, 1.50 OD X .671 ID X .75 LONG	2		
4	51692	BUSHING, CONVEYOR PIVOT	2		
5	70829	SCRAPER, LFT FRONT IDLER	2		ONE IN REAR POSITION OPTIONAL; SEE NOTES 3 & 5
6	70830	SCRAPER, RT FRONT IDLER	2		ONE IN REAR POSITION OPTIONAL; SEE NOTES 3 & 5
7	80455	BUMPER, DIGGER SIDE	2		
8	80523	CONVEYOR, BELT & BAR; 62.17/32 WIDE	1		--SEE NOTE 1--
9	94240	BRACE, CROSS; 36" DIGGER	2		--SEE NOTE 2--
10	127895	SIDE, CONVEYOR;OUTER RIGHT	1		***SEE LEFT CONVEYOR SIDE TABLE BELOW
11	127897	BRACKET, DIGGER SIDE	2		
12	127928	GUIDE, CONV.SIDE; LEFT	1		
13	127929	GUIDE, CONV.SIDE; RIGHT	1		
14	127933	SIDE, DIGGER; INNER RIGHT	1		***SEE LEFT CONVEYOR SIDE TABLE BELOW
15	127972	PLATE, REINFORCEMENT	2		
16	127995	SPACER, SHAKER IDLER	6		
17	128291	PANEL, WEAR; DIGGER NOSE	2		AS REQUIRED
18	80531B	ROLLER, 3.5"	8		
19	G120240	NUT, 5/8-11 USS JAM	2		
20	G124589	NUT, 5/8-11 USS	2		
21	G124590	LOCKNUT, 5/8-11 NYLOCK	2		
22	G131016	WASHER, 5/8 SAE FLAT	2		
23	G271723	SCREW, 5/8-11 X 2 USS CAP	2		
24	S129095	ASSEMBLY, DIGGER BELT SHAKER	1		--SEE NOTE 4--
25	S62442	ASSEMBLY, SCRAPER; CENTER	1		--SEE NOTE 4--

LEFT CONVEYOR SIDE

ITEM	PART NUMBER	DESCRIPTION	QTY SHOWN	QTY REQ'D	COMMENTS
12	127934	SIDE, CONV.; INNER RIGHT		1	
16	127898	SIDE, CONV.; OUTER LEFT		1	

NOTE: "QTY REQ'D" INDICATES QUANTITY NEEDED TO ASSEMBLE A LEFT AND A RIGHT SECTION

--NOTE 1--			
PART NUMBER	DESCRIPTION	QTY REQ'D	COMMENTS
80523	CONVEYOR, BELT & BAR; 62.17/32 WIDE	2	36"
80522	CONVEYOR, BELT & BAR; 66.17/32 WIDE	2	38"
--NOTE 2--			
94240	BRACE, CROSS; 36" DIGGER	4	36"
93801	BRACE, CROSS; 38" DIGGER	4	38"
--NOTE 3--			
128118	BLADE, BELT SCRAPER; STAINLESS STEEL	A/R	
--NOTE 4--			
80491	SNUGULATOR, 1-3/8 W; 5/8 BORE	3	
80721	U-BOLT, 5/16 X 1-3/4 X 3" LG	2	
129095	BRACKET, BELT SHAKER; RIGHT	1	
129096	BRACKET, BELT SHAKER; LEFT	1	
80530A	ROLLER, 6" SHAKER	2	
80531A	ROLLER, 5" SHAKER	4	
G121574	LOCKWASHER, 5/8	3	
G124589	NUT, 5/8-11 USS	3	
G124820	NUT, 1/4-20 LOCK FLANGE [STOVER]	4	
G131015	WASHER, 5/8 USS FLAT	6	
G9413441	SCREW, 5/8-11 X 8 USS CAP	3	
--NOTE 5--			
71183	KIT, MUD SCRAPER	OPT	ONE KIT NEEDED PER CONVEYOR SECTION

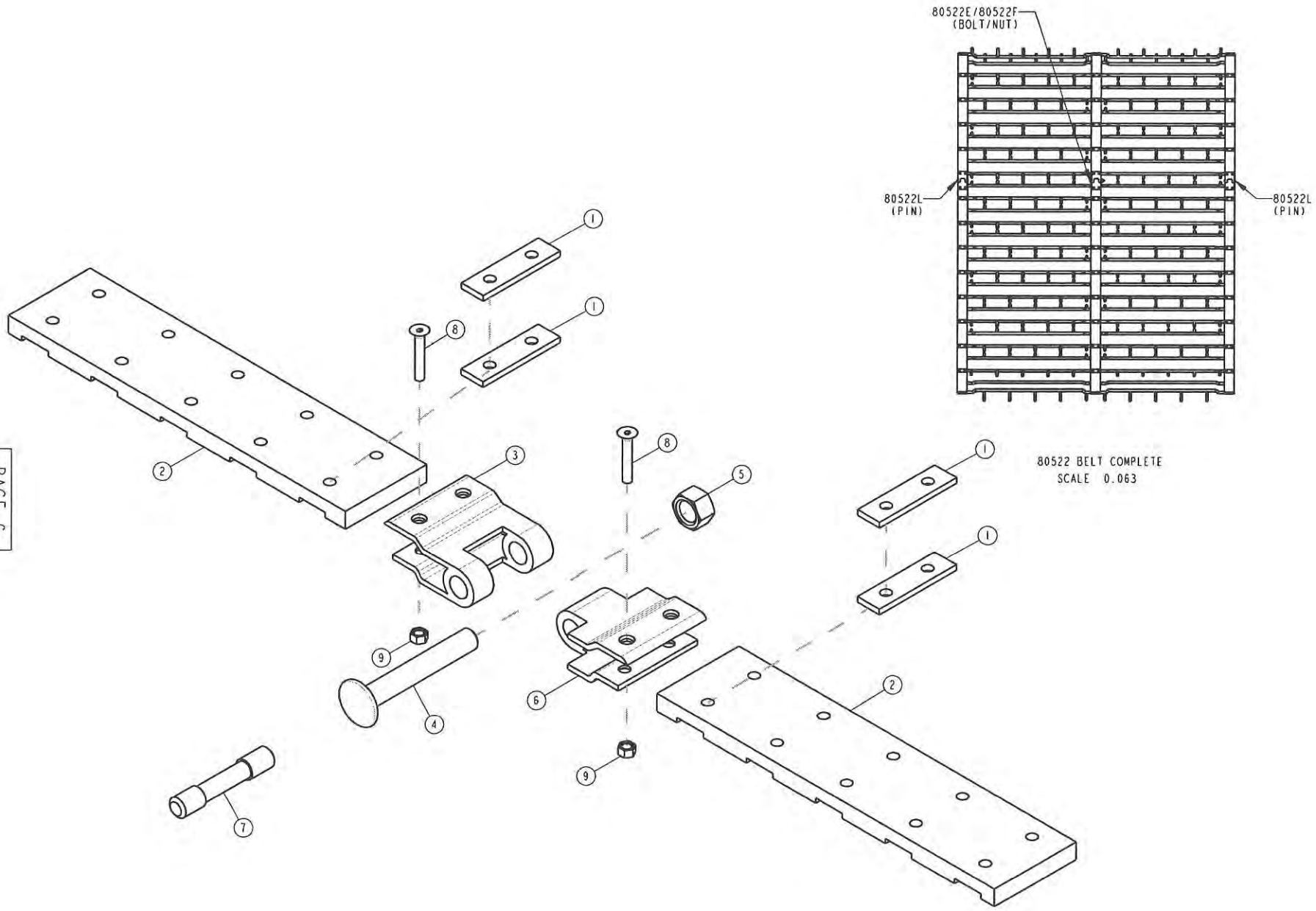
80522E/80522F
(BOLT/NUT)
80522L
(PIN)
80522L
(PIN)
80522 BELT COMPLETE
SCALE 0.063
1
2
3
4
5
6
7
8
9

0337 - BELT CONNECTING KIT - 70808

ITEM	PART NUMBER	DESCRIPTION	QTY SHOWN	QTY REQ'D	COMMENTS
1	21025	SPACER, BELT CONNECTING KIT	4		
2	80522	BELT, SECTION; SHOWN AS REPRESENTATION ONLY!	2		--SEE NOTE 1--
3	80522C	CLIP, BELT CONNECTING;FEMALE	1		
4	80522E	BOLT, M12X75	1		*USE ONLY ON CENTER BELT SECTION.
5	80522F	NUT, M12	1		*USE ONLY ON CENTER BELT SECTION.
6	80522K	CLIP, BELT CONNECTING;MALE	1		
7	80522L	PIN, 11.8MM BELT CONNECTING	1		*USE ONLY ON OUTER BELT SECTIONS.
8	80522M	BOLT,10-32 BELT CLIP	2		
9	80522N	NUT,10-32 BELT CLIP	2		

--NOTE 1--	
80522	38" & 40" DIGGER SPACING
80523	36" DIGGER SPACING
80573	30" DIGGER SPACING

PAGE 8
1
2
3
3
4

0339 - 80523 ROD REPLACEMENT - KIT 70805 - 36" DIGGER

ITEM	PART NUMBER	DESCRIPTION	QTY SHOWN	QTY REQ'D	COMMENTS
1	80523	BELT, SECTION	1		
2	80522G	PLATE, FLOW DRILL	1		
3	80522H	BOLT, M6X25 FLOW DRILL	2		
4	80523A	ROD, 63" BELT & BAR "A"; 1st PIN OUT	1		*80523B - 63" BELT & BAR "B"; 1st PIN IN

2
4
4
1
3

0338 - 80522 ROD REPLACEMENT - KIT 70804 - 38" & 40" DIGGER

ITEM	PART NUMBER	DESCRIPTION	QTY SHOWN	QTY REQ'D	COMMENTS
1	80522	BELT, SECTION; SHOWN AS REPRESENTATION ONLY!	1		
2	80522A	ROD, 67" BELT & BAR "A"; 1st PIN OUT	1		*80522B - 67" BELT & BAR "B"; 1st PIN IN
3	80522G	PLATE, FLOW DRILL	1		
4	80522H	BOLT, M6X25 FLOW DRILL	2		

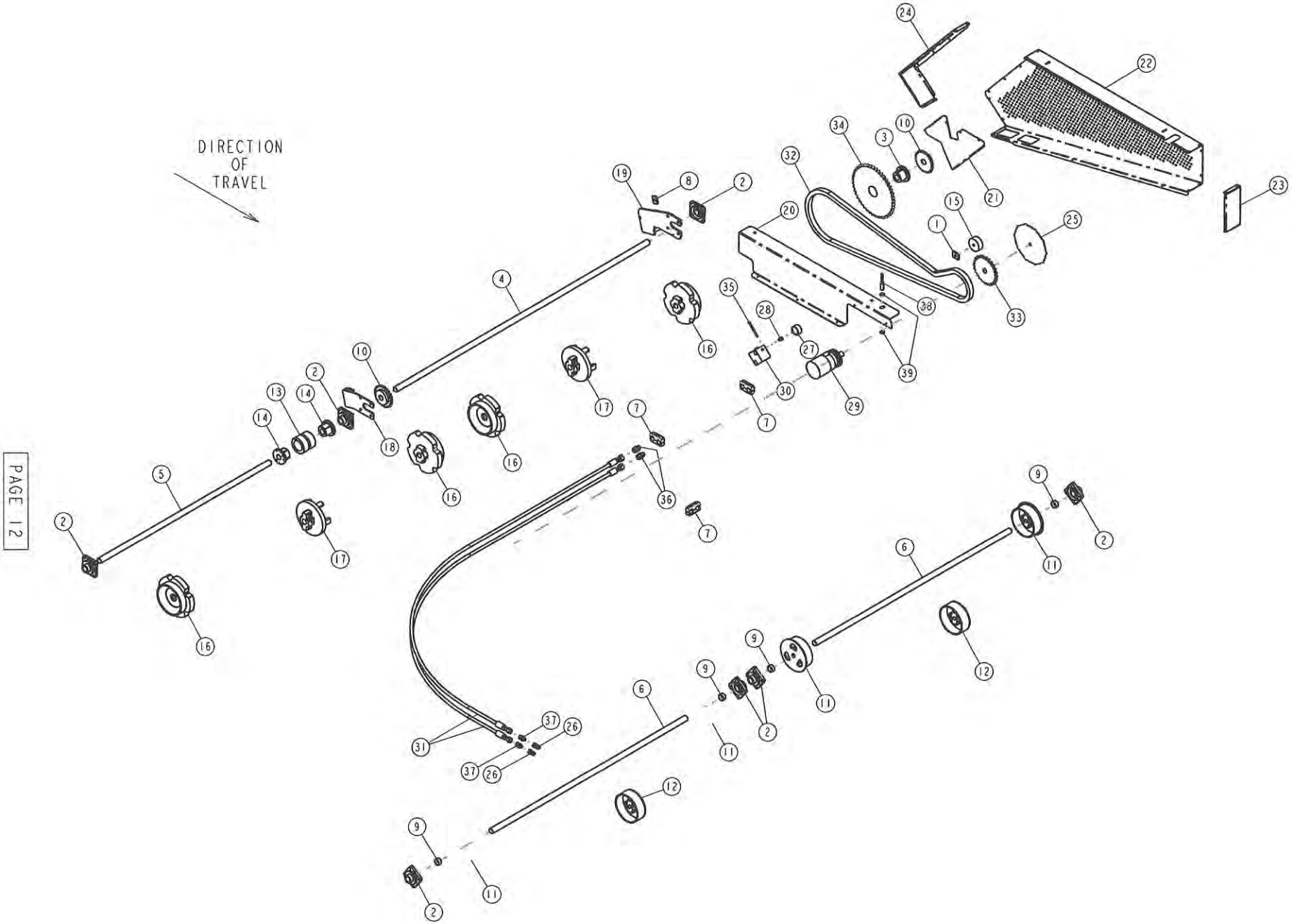
DIRECTION
OF
TRAVEL

ITEM	PART NUMBER	DESCRIPTION	QTY SHOWN	QTY REQ'D	COMMENTS
1	2020	NUT, 5/8-11,2X1-3/4 IDLER ADJ	1		
2	3253	BEARING, 1.7/16" 4-H; TRIPLE LIP	7		
3	5914	BUSHING, QI 1-7/16	1		
4	10930	SHAFT, DRIVE; 36" DIGGER	1		--SEE NOTE 1--
5	10931	SHAFT, SHORT; 36" DIGGER	1		--SEE NOTE 2--
6	10936	SHAFT, IDLER; 36" DIGGER	2		--SEE NOTE 3--
7	20289	CLAMP, DUAL 1.3/16 OD HOSE; S/S	3		
8	20874	NUT, 5/8-11,2X1-3/8 IDLER ADJ	1		
9	20957	BUSHING,DIGGER IDLER	4		
10	51079	SPROCKET, 60B24 F1-7/16; 2 SETSCREWS	2		
11	51661	IDLER, 2-PIECE FLANGED	4		
12	51663	IDLER, 2-PIECE NON-FLANGED	2		
13	51691	COUPLER,CSQ,QI BUSHING	1		
14	51695	BUSHING, QI 1-7/16	2		
15	80491	SNUGULATOR, 1-3/8 W; 5/8 BORE	1		
16	80525	SPROCKET, SP150 URETHANE 1-7/16 BORE	4		
17	80641	IDLER, CAST SPLIT	2		
18	127961	BRACKET, IDLER; CENTER	1		
19	127996	BRACKET, IDLER DRIVE	1		
20	127997	SHIELD, MAIN DRIVE BACK	1		
21	127998	SHIELD, INVERTER DRIVE; INNER	1		
22	127999	SHIELD, MAIN DRIVE	1		
23	128000	SHIELD, MAIN DRIVE FRONT	1		
24	128001	SHIELD, MAIN DRIVE REAR	1		
25	128006	DISC, SPEED INDICATOR; 11-3/8 DIA.	1		
26	140341	COUPLER,8 ORBF-1/2 QDM	2		
27	140506	GAUGE, PRESSURE; 5000 PSI	1		OPT
28	140545	HYDFITTING,-6 ORB X 1/4 NPTF	1		OPT
29	140641	MOTOR, HYD.; 18.3 CU. IN. W/MANIFOLD MT.	1		--SEE NOTE 5--
30	140644	MANIFOLD, W/CV103P CARTRIDGE	1		--SEE NOTE 6--
31	140653	HOSE, 3/4 X 187" HYD.	2		
32	4365D-129	CHAIN, NO. 80, 127 PITCHES + CONNECTOR + OFFSET	1		
33	80B24-1-4	SPROCKET, 80B24;F1.1/4; 2 SETSCREWS	1		
34	80Q45	SPROCKET, 80Q45	1		
35	G11500721	SCREW, M8 X 100MM X 1.25 PITCH SOCKET HEAD	4		
36	J38H1163	ADAPTER,12 ORB X 12 ORF	2		
37	J38H1317	HYDF, -10 ORS TO -8 ORB STRT	2		
38	JAH116104	SENSOR, SHAFT SPEED (40-47)	1		
39	JH104418	NUT, SENSOR FOR TRANSMISSION	2		

--NOTE 1--			
PART NUMBER	DESCRIPTION	QTY REQ'D	COMMENTS
10930	SHAFT, DRIVE; 36" DIGGER	1	ADI-436
10928	SHAFT, DRIVE; 38" DIGGER	1	ADI-438
--NOTE 2--			
10931	SHAFT, SHORT; 36" DIGGER	1	ADI-436
10929	SHAFT, SHORT; 38" DIGGER	1	ADI-438
--NOTE 3--			
10936	SHAFT, IDLER; 36" DIGGER	2	ADI-436
10831	SHAFT, IDLER; 38" DIGGER	2	ADI-438
--NOTE 5--			
4978	O-RING, TS-112; 65-75 DUROMETER	A/R	
G451800-8	SCREW, 1/2-13 X 1.1/2 FLANGE HEAD CAP	A/R	
G120378	NUT, 1/2-13 USS	A/R	
G120384	LOCKWASHER, 1/2	A/R	
--NOTE 6--			
140672	VALVE, CHECK	A/R	

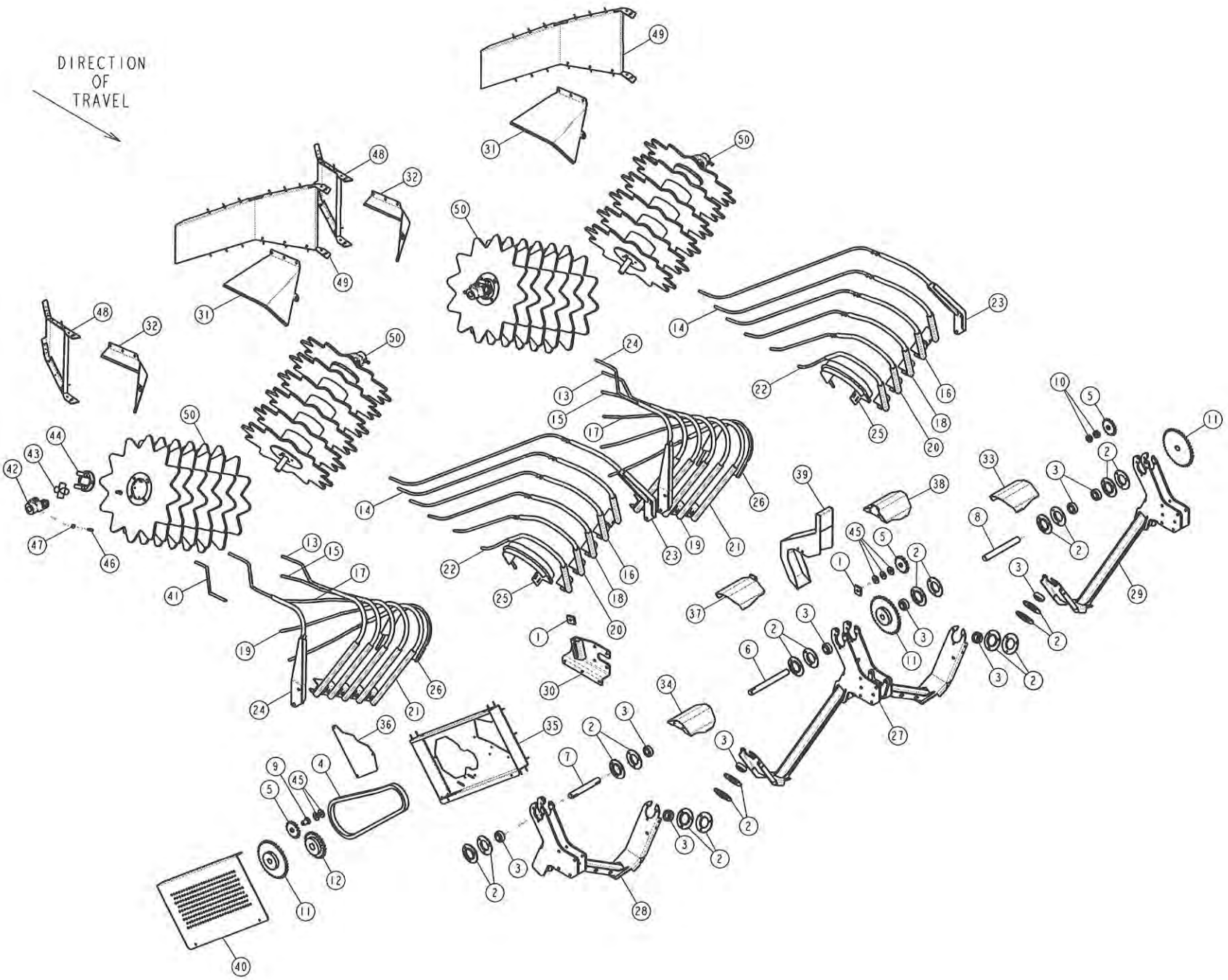
DIRECTION
OF
TRAVEL

4-ROW 36" & 38" TWIN V INVERTER KIT; SOLID

ITEM	PART NUMBER	DESCRIPTION	QTY SHOWN	QTY REQ'D	COMMENTS
1	2020	NUT, 5/8-11,2X1-3/4 IDLER ADJ	2		
2	3093	FLANGETTE, 62MS FOR 1.3/16 BEARING	20		
3	3096	INSERT, 1.3/16 REPLACEMENT BEARING	10		
4	4043-85	CHAIN, NO.60, 83 PITS + CONN + OFFSET	1	3	
5	5122	IDLER, NO.60 CHAIN SPROCKET	3		
6	10950	SHAFT, V INVERTER CENTER	1		
7	10951	SHAFT, INVERTER OUTER RIGHT	1		
8	10952	SHAFT, INVERTER OUTER LEFT	1		
9	20592	STANDOFF, 5/8 BORE X 1-1/2 LONG	1		
10	20829	SPACER, 1.1/2 OD X .671 ID X .50LG	2		
11	51002	SPROCKET, 60B36 F1-3/16	3		
12	51079	SPROCKET, 60B24 F1-7/16; 2 SETSCREWS	1		
13	61949	ROD, INVERTER; #2 RIGHT "V"	2		
14	61950	ROD, INVERTER; #2 LEFT "V"	2		
15	61951	ROD, INVERTER; #3 RIGHT "V"	2		
16	61952	ROD, INVERTER; #3 LEFT "V"	2		
17	61953	ROD, INVERTER; #4 RIGHT "V"	2		
18	61954	ROD, INVERTER; #4 LEFT "V"	2		
19	61955	ROD, INVERTER; #5 RIGHT "V"	2		
20	61956	ROD, INVERTER; #5 LEFT "V"	2		
21	61957	ROD, INVERTER; #6 RIGHT "V"	2		
22	61958	ROD, INVERTER; #6 LEFT "V"	2		
23	62037	ROD, #1 INVERTER; LEFT "V"	2		
24	62038	ROD, #1 INVERTER; RIGHT "V"	2		
25	62099	ROD, INNER; RIGHT W/SHIELD	2		
26	62100	ROD, INNER; LEFT W/SHIELD	2		
27	94481	MOUNT, INVERTER ROD; V-36	1		-- SEE NOTE 1 --
28	94484	MOUNT, INVERTER; 36 RIGHT	1		-- SEE NOTE 2 --
29	94485	MOUNT, INVERTER; 36 LEFT	1		-- SEE NOTE 3 --
30	128005	BRACKET, IDLER W/INVERTER	1		
31	128137	SHIELD, LFT VINE DEFLECTOR	2		
32	128138	SHIELD, RT VINE DEFLECTOR	2		
33	128139	SHIELD, U-JOINT; OUTER LEFT	1		
34	128140	SHIELD, U-JOINT, OUTER RIGHT	1		
35	128150	SHIELD, V INVERTER MT, RT	1		
36	128151	SHIELD, RT INVERTER DOOR	1		
37	128168	SHIELD, U-JOINT; INNER LEFT	1		
38	128169	SHIELD, U-JOINT; INNER RIGHT	1		
39	128170	SHIELD, INVERTER DRIVE; MIDDLE	1		
40	128177	COVER, INV SHIELD; AL	1		
41	140509	HOSE, INVERTER ROD COVER	1	APPROX. 96'	APPROX. 4' REQ'D/INVERTER ROD
42	11377A	YOKE, 1-3/16 BORE X 3.25 LENGTH	4		-- SEE NOTE 4 --
43	11377B	SPIDER, 1-1/4 X 3-7/32 OA	4		-- SEE NOTE 4 --
44	11377C	YOKE, 4-3/8 FLANGE	4		-- SEE NOTE 4 --
45	G131015	WASHER, 5/8 USS FLAT	5	A/R	
46	G139454	SETSCREW, 7/16-14 X 1 LG.;SQ. HEAD	16		
47	G271509	NUT, 7/16-14 USS JAM	16		
48	S128152	FENDER,RIGHT	2		
49	S128153	FENDER; LEFT	2		
50	S94455	ASSEMBLY, SOLID "V" INV. ROTOR; 36"	4		-- SEE NOTE 5 --

NOTE 1			
PART NUMBER	DESCRIPTION	QTY REQ'D	COMMENTS
94481	MOUNT, INVERTER ROD; V-36	1	AD1-436
94482	MOUNT, INVERTER ROD; V-38	1	AD1-438
NOTE 2			
94484	MOUNT, INVERTER; 36 RIGHT	1	AD1-436
94486	MOUNT, INVERTER; 38 RIGHT	1	AD1-438
NOTE 3			
94485	MOUNT, INVERTER; 36 LEFT	1	AD1-436
94487	MOUNT, INVERTER; 38 LEFT	1	AD1-438
NOTE 4			
---	COMPLETE UNIT = 11377		IN ROTOR SUBASSEMBLIES
NOTE 5			
S94455	ASSEMBLY, SOLID "V" INV. ROTOR; 36"	4	AD1-436
S94454	ASSEMBLY, SOLID "V" INV. ROTOR; 38"	4	AD1-438

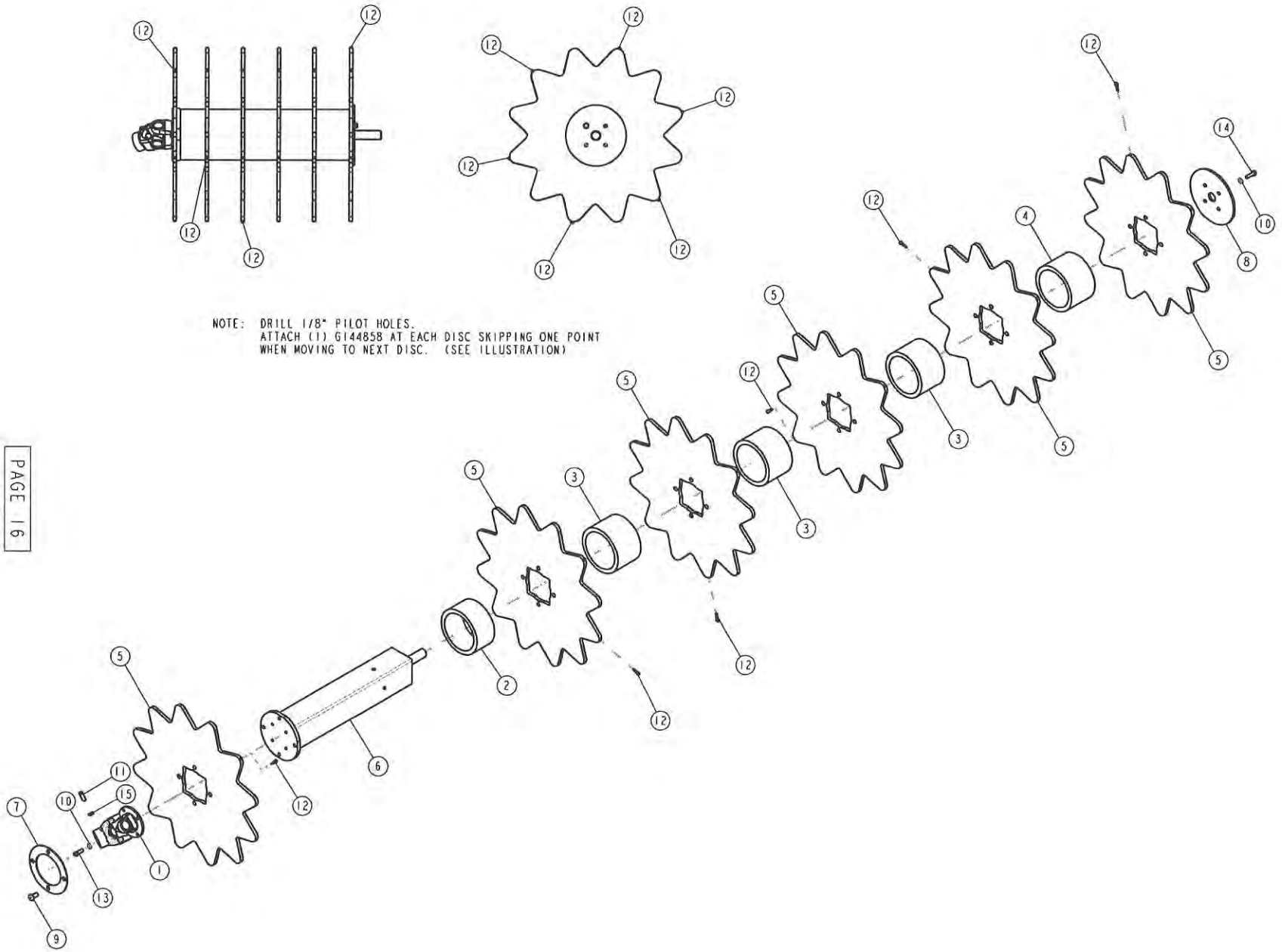
NOTE: DRILL 1/8" PILOT HOLES.
ATTACH (1) G144858 AT EACH DISC SKIPPING ONE POINT
WHEN MOVING TO NEXT DISC. (SEE ILLUSTRATION)

SOLID "V" INVERTER ROTOR; 36"

ITEM	PART NUMBER	DESCRIPTION	QTY SHOWN	QTY REQ'D	COMMENTS
1	11377	U-JOINT, 1-3/14 4 BOLT FLANGE	1		
2	20937	SPACER, 3-17/64; INVERTER ROTOR	1		
3	20938	SPACER, 4-9/32; INVERTER ROTOR	3		
4	20939	SPACER, 4-11/32; INVERTER ROTOR	1		
5	80498	DISC, URETHANE; 23.1/2" DIA.	6		
6	94455	ROTOR, "V" TUBE INVERTER; 36"	1		
7	128303	PLATE, ROTOR FLANGE	1		
8	128304	CAP, INVERTOR ROTOR	1		
9	G102924	SCREW, 1/2-13 X 1 BUTTON SOCKET CAP	4		
10	G120382	LOCKWASHER, 3/8	8		
11	G139454	SETSCREW, 7/16-14 X 1 LG.;SQ. HEAD	1		
12	G144858	SCREW, #14 X 1 ZINC PLATED HEX WASHER HEAD SELF-DRILLING	6		
13	G180122	SCREW, 3/8-16X1 USS CAP	4		
14	G180124	SCREW, 3/8-16 X 1-1/4 USS CAP	4		
15	G271509	NUT, 7/16-14 USS JAM	1		

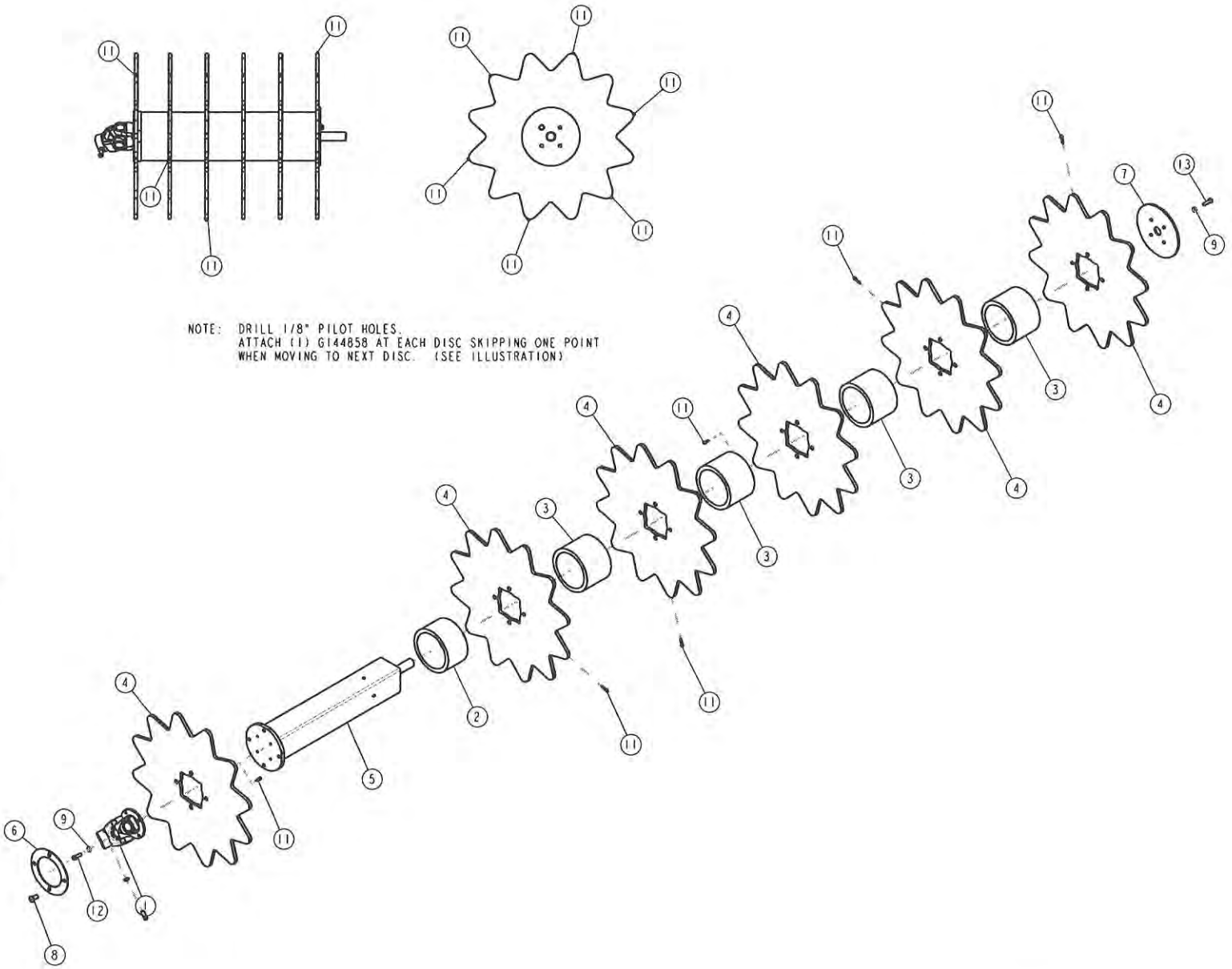
NOTE: DRILL 1/8" PILOT HOLES.
ATTACH (1) G144858 AT EACH DISC SKIPPING ONE POINT
WHEN MOVING TO NEXT DISC. (SEE ILLUSTRATION)

SOLID "V" INVERTER ROTOR; 38"/40"

ITEM	PART NUMBER	DESCRIPTION	QTY SHOWN	QTY REQ'D	COMMENTS
1	11377	U-JOINT, 1-3/14 4 BOLT FLANGE	1		
2	20935	SPACER, 3-23/32; INVERTER ROTOR	1		
3	20936	SPACER, 4-21/32; INVERTER ROTOR	4		
4	80498	DISC, URETHANE; 23.1/2" DIA.	6		
5	94454	ROTOR, "V" TUBE INVERTER; 38"	1		
6	128303	PLATE, ROTOR FLANGE	1		
7	128304	CAP, INVERTOR ROTOR	1		
8	G102924	SCREW, 1/2-13 X 1 BUTTON SOCKET CAP	4		
9	G120382	LOCKWASHER, 3/8	8		
10	G139454	SETSCREW, 7/16-14 X 1 LG.;SQ. HEAD	1		
11	G144858	SCREW, #14 X 1 ZINC PLATED HEX WASHER HEAD SELF-DRILLING	6		
12	G180122	SCREW, 3/8-16X1 USS CAP	4		
13	G180124	SCREW, 3/8-16 X 1-1/4 USS CAP	4		
14	G271509	NUT, 7/16-14 USS JAM	1		

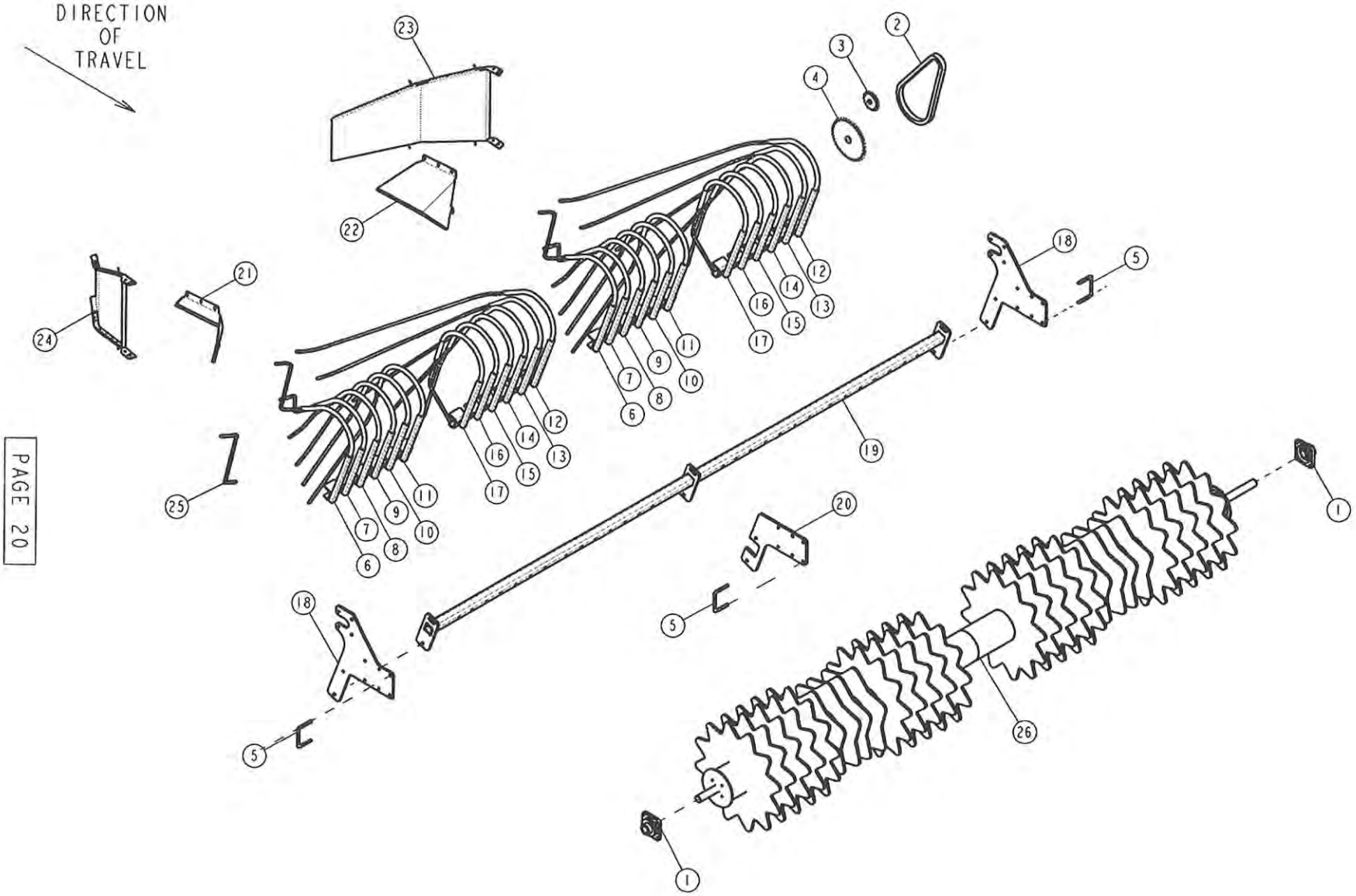
DIRECTION
OF
TRAVEL
1
2
3
4
5
6
7
8
9
10
11
12
13
14
15
16
17
18
19
20
21
22
23
24
25
26

ADI-436 STRAIGHT INVERTER

ITEM	PART NUMBER	DESCRIPTION	QTY SHOWN	QTY REQ'D	COMMENTS
1	3253	BEARING, 1.7/16" 4-H; TRIPLE LIP	2		
2	4043-83	CHAIN, NO.60, 81 PITS + CONN + OFFSET	1		
3	5122	IDLER, NO.60 CHAIN SPROCKET	1		
4	5581	SPROCKET, 60B36 F1-7/16	1		
5	61931	U-BOLT 1/2	3	6	
6	61959	ROD, INVERTER; RIGHT 1	2		
7	61960	ROD, INVERTER; RIGHT 2	2		
8	61961	ROD, INVERTER; RIGHT 3	2		
9	61962	ROD, INVERTER; RIGHT 4	2		
10	61963	ROD, INVERTER; RIGHT 5	2		
11	61964	ROD, INVERTER; RIGHT 6	2		
12	61965	ROD, INVERTER; LEFT 1	2		
13	61966	ROD, INVERTER; LEFT 2	2		
14	61967	ROD, INVERTER; LEFT 3	2		
15	61968	ROD, INVERTER; LEFT 4	2		
16	61969	ROD, INVERTER; LEFT 5	2		
17	61970	ROD, INVERTER; LEFT 6	2		
18	94241	MOUNT, INVERTER; RIGHT	2		
19	94244	MOUNT, INVERTER ROD; 4 ROW 72	1		
20	94252	BRACKET, INVERTER ROD MOUNT SUPPORT	1		
21	127991	DEFLECTOR, VINE; RIGHT	1	2	
22	128009	DEFLECTOR, VINE; LEFT	1	2	
23	128155	FENDER, ALUMINUM STRAIGHT ROTOR; LFT	1	2	
24	128156	FENDER, ALUMINUM STRAIGHT ROTOR; RT	1	2	
25	140509	HOSE, INVERTER ROD COVER	1	APPROX. 96'	APPROX. 4' REQ'D/INVERTER ROD
26	S61973-1	INVERTER ROTOR 4 ROW-36	1		

ASSEMBLY NOTES:

- PLACE ONE END CAP [127235] ON ROTOR SHAFT USING 1-1/4 LG X 3/8-16 BOLTS [GI80124].
- ADD ALL SPACERS AND DISCS IN PATTERN SHOWN.
- USE 2-1/2" LG X 3/8-16 OR LONGER BOLTS THROUGH SECOND END CAP [127235] TO TIGHTEN & COMPRESS SPACERS/DISCS. TIGHTEN UNTIL METAL PLATE HITS END OF TUBING. IF NECESSARY, USE SPACERS 20931 TO COMPENSATE.
- AFTER COMPRESSION, REPLACE LONG BOLTS WITH 1-1/4 LG X 3/8-16.

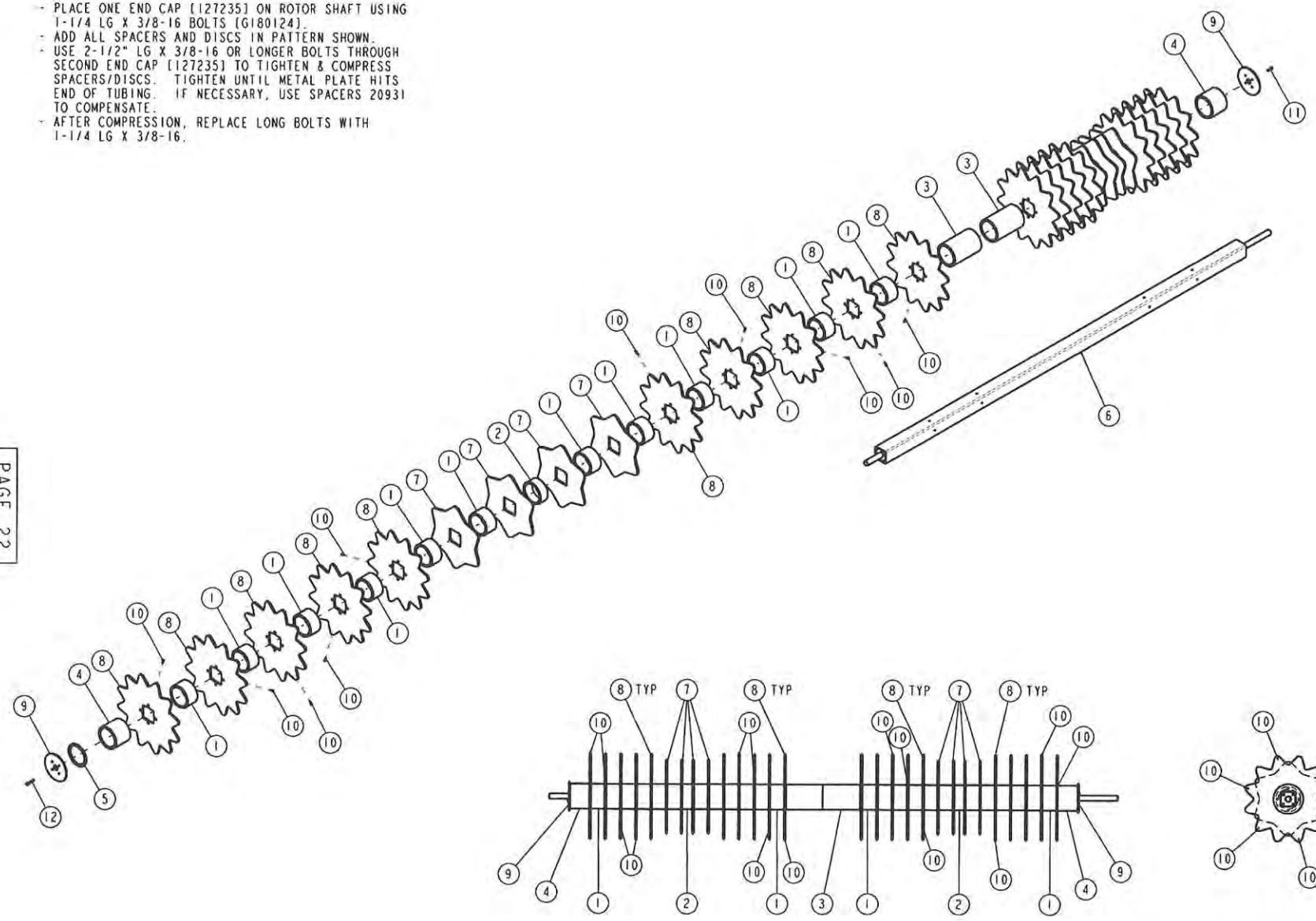

NOTE: DRILL 1/8" PILOT HOLE THEN ATTACH (1) GI44858 AT EACH DISC SKIPPING ONE POINT WHEN MOVING TO NEXT DISC. (SEE ILLUSTRATION)

AD1-436 INVERTER ROTOR ASSEMBLY

ITEM	PART NUMBER	DESCRIPTION	QTY SHOWN	QTY REQ'D	COMMENTS
1	20751	SPACER, 3.5/8; INVERTER ROTOR	24		
2	20849	SPACER, 2-9/16; INVERTER ROTOR	2		
3	20852	SPACER, 9-25/32; INVERTER ROTOR	2		
4	20855	SPACER, INVERTER ROTOR; 5-1/4	2		
5	20931	SPACER, 3/16"; INVERTER ROTOR	1	A/R	
6	61973	ROTOR SHAFT ASM, 4 ROW 36	1		
7	80449	DISC, 95A CAST URETHANE; 19.3/4"	8		
8	80498	DISC, URETHANE; 23.1/2" DIA.	20		
9	127235	CAP, INVERTOR ROTOR	2		
10	G144858	SCREW, #14 X 1 ZINC PLATED HEX WASHER HEAD SELF-DRILLING	20		
11	G180124	SCREW, 3/8-16 X 1-1/4 USS CAP	1	8	
12	G180134	SCREW, 3/8-16 X 2-1/2 USS CAP	1	4 OR A/R	

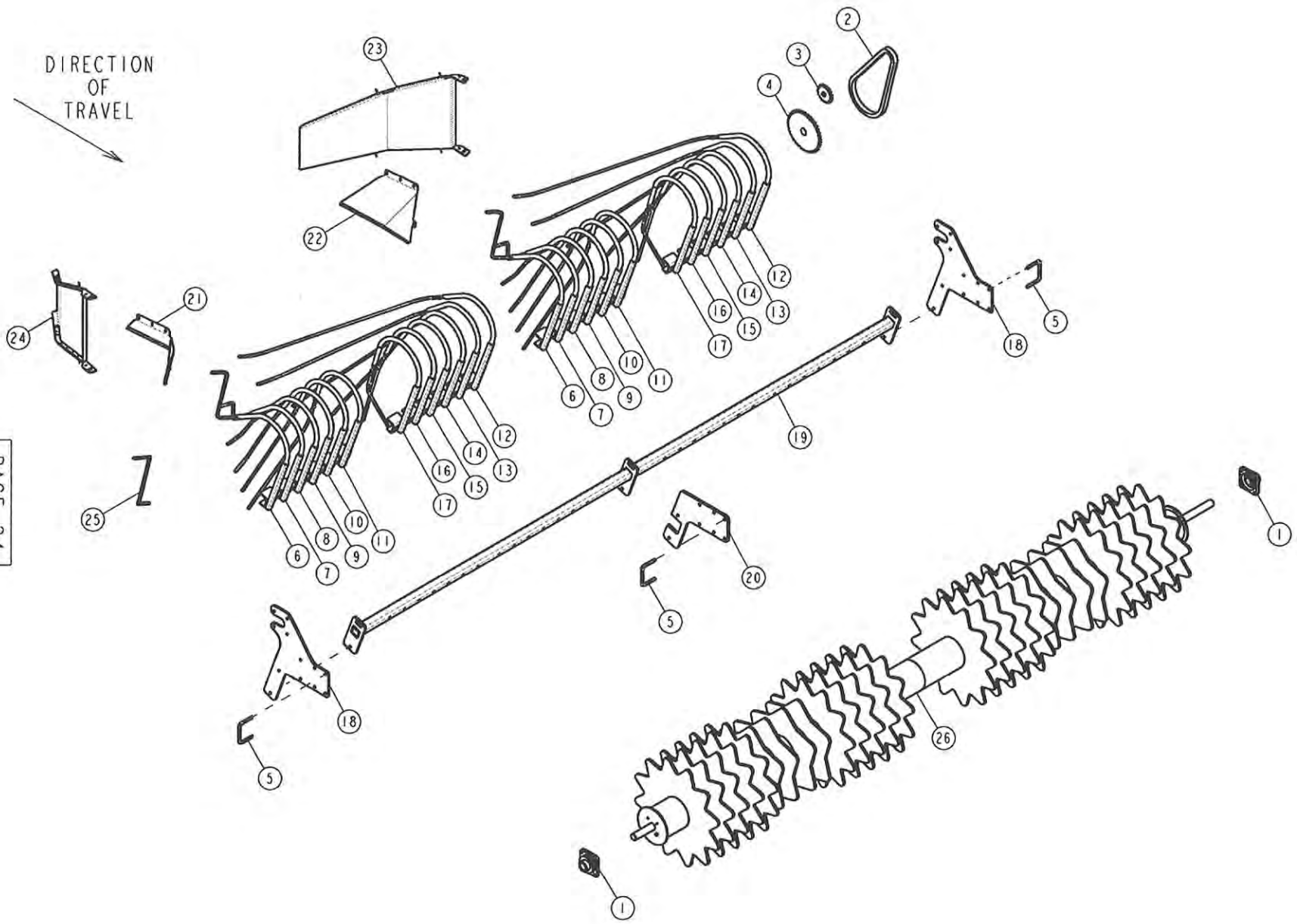
DIRECTION
OF
TRAVEL

ADI-438 STRAIGHT INVERTER

ITEM	PART NUMBER	DESCRIPTION	QTY SHOWN	QTY REQ'D	COMMENTS
1	3253	BEARING, 1.7/16" 4-H; TRIPLE LIP	2		
2	4043-83	CHAIN, NO.60, 81 PITS + CONN + OFFSET	1		
3	5122	IDLER, NO.60 CHAIN SPROCKET	1		
4	5581	SPROCKET, 60B36 F1-7/16	1		
5	61931	U-BOLT 1/2	3	6	
6	61959	ROD, INVERTER; RIGHT 1	2		
7	61960	ROD, INVERTER; RIGHT 2	2		
8	61961	ROD, INVERTER; RIGHT 3	2		
9	61962	ROD, INVERTER; RIGHT 4	2		
10	61963	ROD, INVERTER; RIGHT 5	2		
11	61964	ROD, INVERTER; RIGHT 6	2		
12	61965	ROD, INVERTER; LEFT 1	2		
13	61966	ROD, INVERTER; LEFT 2	2		
14	61967	ROD, INVERTER; LEFT 3	2		
15	61968	ROD, INVERTER; LEFT 4	2		
16	61969	ROD, INVERTER; LEFT 5	2		
17	61970	ROD, INVERTER; LEFT 6	2		
18	94241	MOUNT, INVERTER; RIGHT	2		
19	94243	MOUNT, INVERTER ROD; 4 ROW 76	1		
20	94252	BRACKET, INVERTER ROD MOUNT SUPPORT	1		
21	127991	DEFLECTOR, VINE; RIGHT	1	2	
22	128009	DEFLECTOR, VINE; LEFT	1	2	
23	128155	FENDER, ALUMINUM STRAIGHT ROTOR; LFT	1	2	
24	128156	FENDER, ALUMINUM STRAIGHT ROTOR; RT	1	2	
25	140509	HOSE, INVERTER ROD COVER	1	APPROX. 96'	APPROX. 4' REQ'D/INVERTER ROD
26	S61974-1	INVERTER ROTOR ASM, 4 ROW-38	1		

ASSEMBLY NOTES:

- PLACE ONE END CAP [127235] ON ROTOR SHAFT USING 1-1/4 LG X 3/8-16 BOLTS [G180124].
- ADD ALL SPACERS AND DISCS IN PATTERN SHOWN.
- USE 2-1/2" LG X 3/8-16 OR LONGER BOLTS THROUGH SECOND END CAP [127235] TO TIGHTEN & COMPRESS SPACERS/DISCS. TIGHTEN UNTIL METAL PLATE HITS END OF TUBING. IF NECESSARY, USE SPACERS 20931 TO COMPENSATE.
- AFTER COMPRESSION, REPLACE LONG BOLTS WITH 1-1/4 LG X 3/8-16.

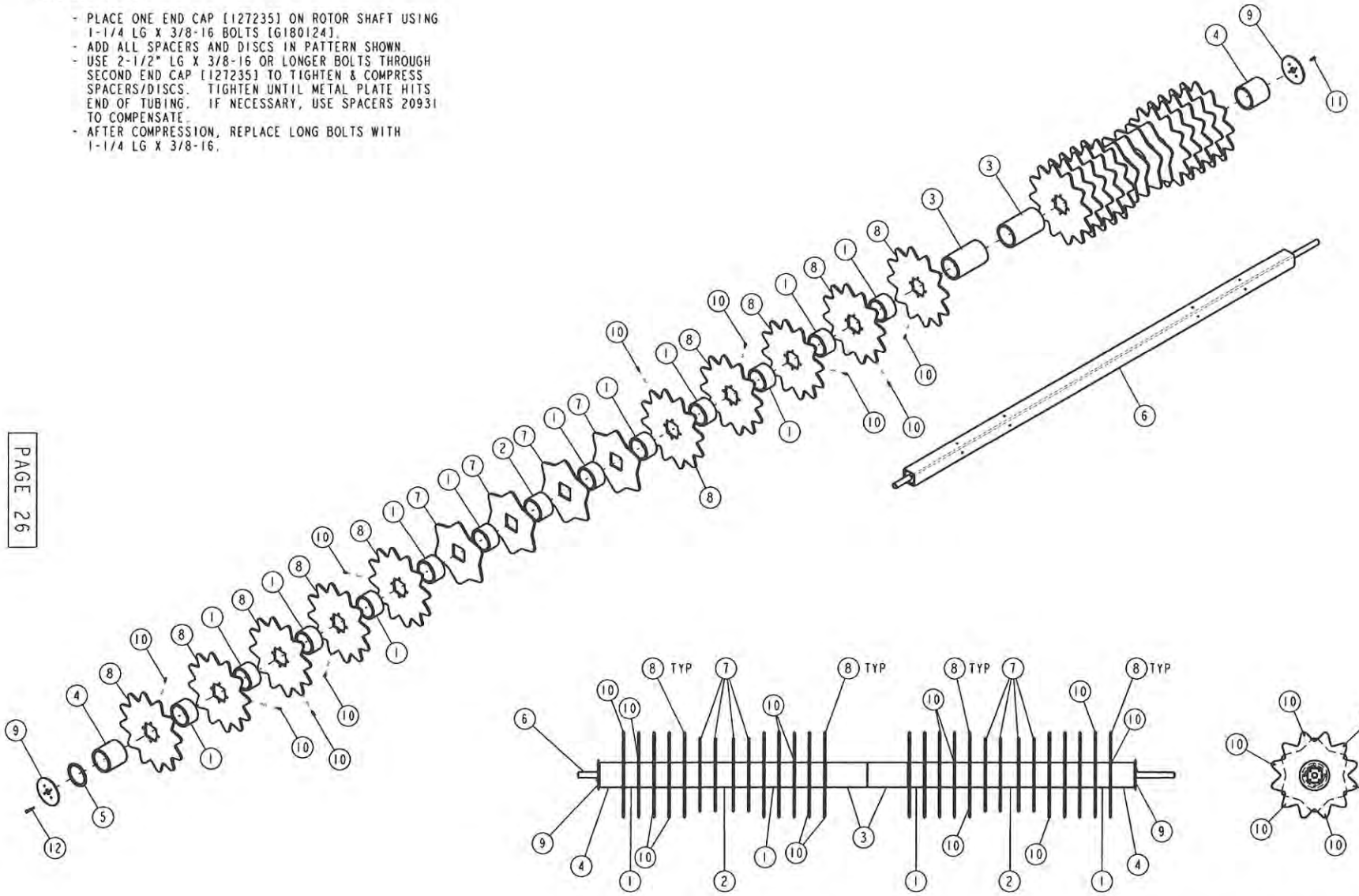

NOTE: DRILL 1/8" PILOT HOLE THEN ATTACH (1) G144858 AT EACH DISC SKIPPING ONE POINT WHEN MOVING TO NEXT DISC. (SEE ILLUSTRATION)

ADI-438 INVERTER ROTOR ASSEMBLY

ITEM	PART NUMBER	DESCRIPTION	QTY SHOWN	QTY REQ'D	COMMENTS
1	20751	SPACER, 3.5/8; INVERTER ROTOR	24		
2	20853	SPACER, 4-3/8; INVERTER ROTOR	2		
3	20856	SPACER, 10-27/32; INVERTER ROTOR	2		
4	20857	SPACER, 6-1/4; INVERTER ROTOR	2		
5	20931	SPACER, 3/16"; INVERTER ROTOR	1	A/R	
6	61974	ROTOR, INVERTER; 4-ROW 76	1		
7	80449	DISC, 95A CAST URETHANE; 19.3/4"	8		
8	80498	DISC, URETHANE; 23.1/2" DIA.	20		
9	127235	CAP, INVERTOR ROTOR	2		
10	G144858	SCREW, #14 X 1 ZINC PLATED HEX WASHER HEAD SELF-DRILLING	20		
11	G180124	SCREW, 3/8-16 X 1-1/4 USS CAP	1	8	
12	G180134	SCREW, 3/8-16 X 2-1/2 USS CAP	1	4 OR A/R	

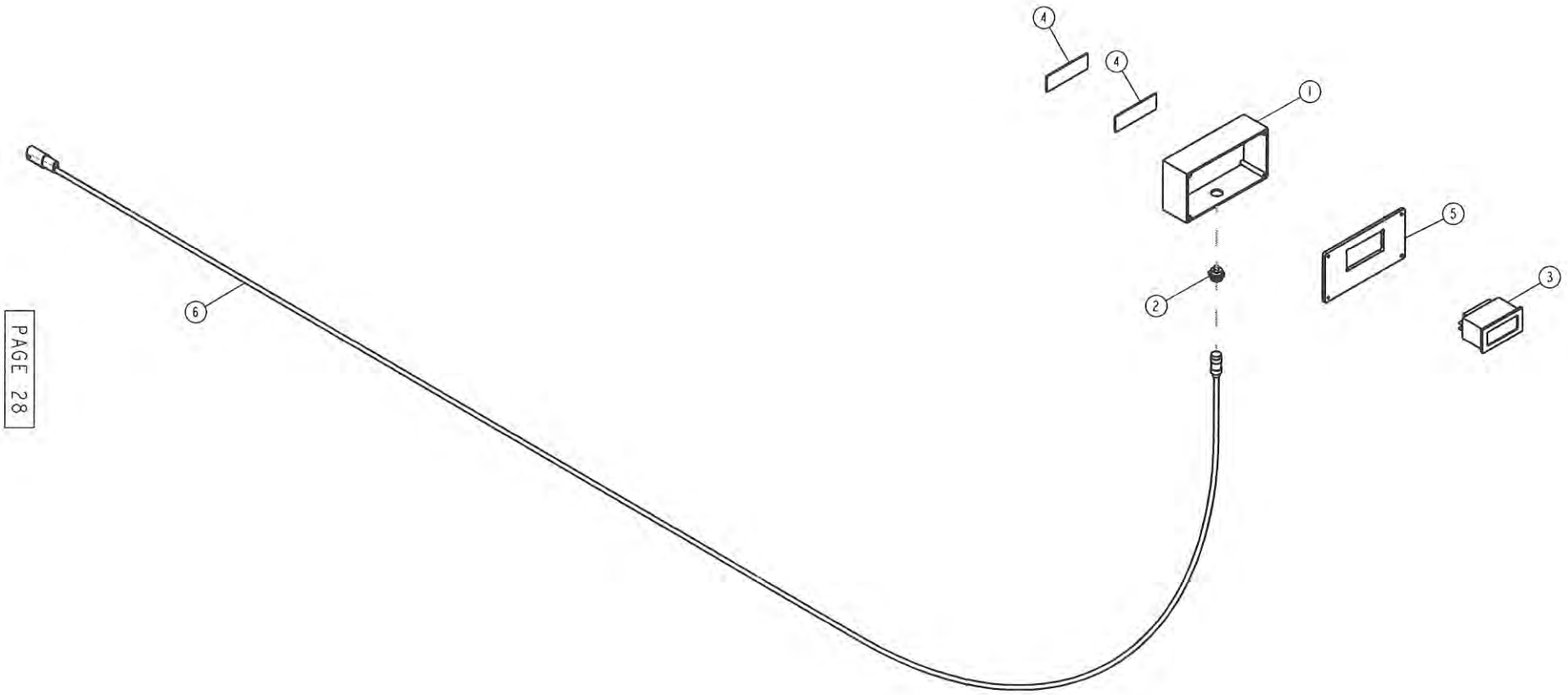
4
4
1
5
3
2
6

S15465-1 SPEED INDICATOR

ITEM	PART NUMBER	DESCRIPTION	QTY SHOWN	QTY REQ'D	COMMENTS
1	15465	BOX, PLASTIC JUNCTION W/1 HOLE	1		
2	15468	SOCKET, 4 PIN CHASSIS MOUNT	1		
3	16395	TACHOMETER, OEMAK001	1		
4	80408	VELCRO, HOOK & LOOP, 1" WIDE	1		
5	15464C	COVER, PLASTIC JUNCTION BOX; W/HOLE	1		
6	S15569-24	CABLE, SPEED INDICATOR; 24 FT.	1		

Note: Speed Indicator Cable Not Included in S15465-1

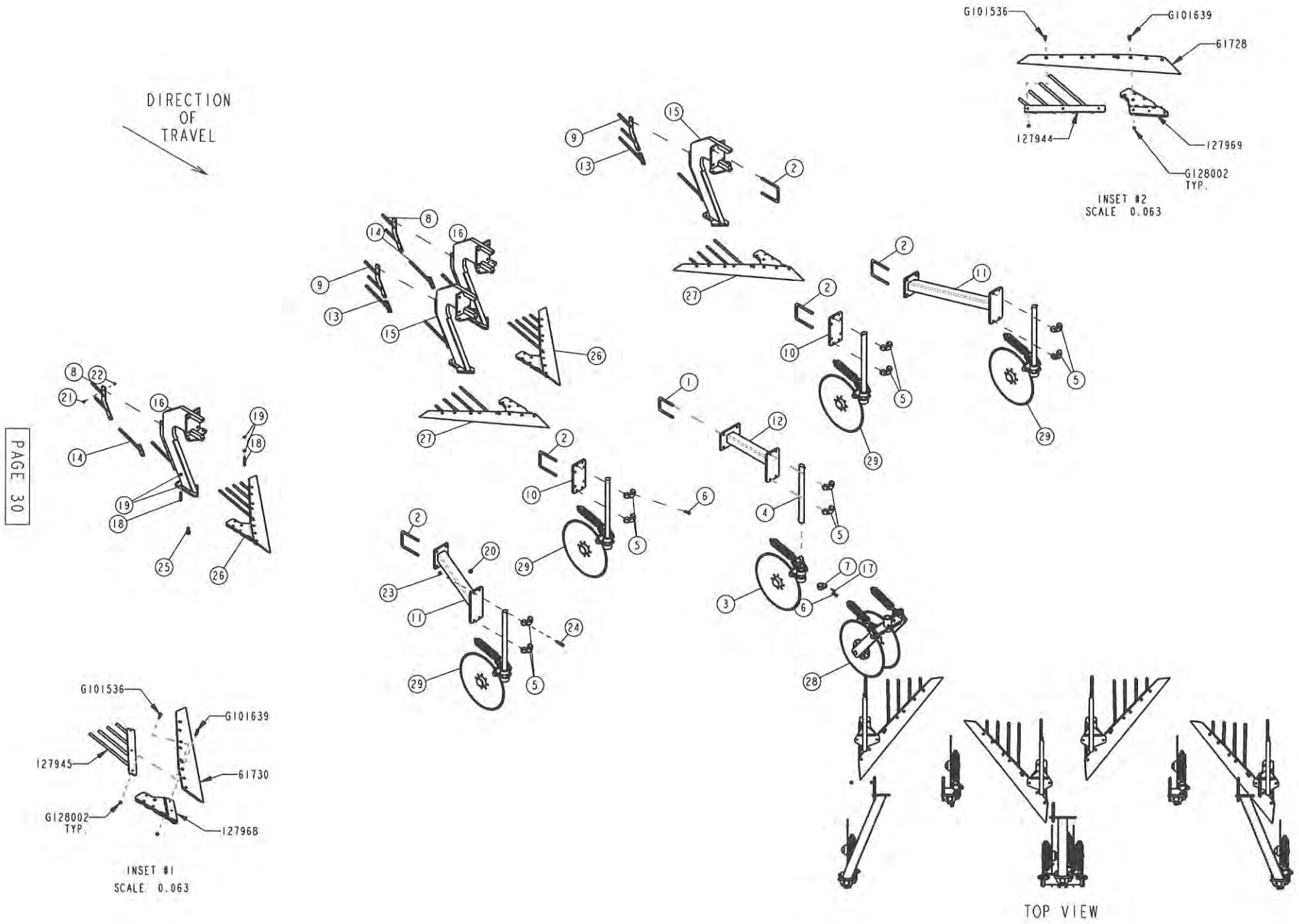
DIRECTION OF TRAVEL
PAGE 30
G101536
G101639
61728
127944
127969
G128002 TYP.
INSET #2
SCALE 0.063
G101536
G101639
127945
61730
G128002 TYP.
127968
INSET #1
SCALE 0.063
TOP VIEW

KIT #70754 PLOW/COULTER SET-UP
4-ROW 72" & 76" FRAME, 37° SWEEP ANGLE

ITEM	PART NUMBER	DESCRIPTION	QTY SHOWN	QTY REQ'D	COMMENTS
1	61948	U-BOLT, 5/8-18 X 4.063 X 5.75; W/NUTS	1		
2	61979	U-BOLT, 5/8-18 X 5-1/16 X 7; W/NUTS	5		
3	80464	ASSEMBLY, COULTER W/BLADE	1		SEE NOTE 3
4	80499	SHANK, 22" LG. X 1.1/2	1		
5	80500	CLAMP, COULTER, 1.1/2	10		
6	80501	SETSCREW,1/2-13X1-1/2 SQ HEAD	2		(10) STANDARD; (1) USED ONLY WITH 80464 OPTION
7	80502	COLLAR, "RIGID" COULTER	1		ONLY USED WITH 80464 OPTION
8	93692	MOUNT, GUIDE ROD; LEFT	2		
9	93693	MOUNT, GUIDE ROD; RIGHT	2		
10	94002	MOUNT, YETTER COULTER	2		
11	94226	MOUNT, ANGLED COULTER	2		
12	94232	MOUNT, CENTER COULTER; 4"	1		
13	94348	ROD, 3RD; LEFT	4		
14	94349	ROD, 3RD; RIGHT	4		
15	127920	SHANK, LEFT DIGGER; 45	2		
16	127921	SHANK, RIGHT DIGGER; 45	2		
17	G102887	SETSCREW, 5/16-18 X 1.1/2 SQ HEAD	1		ONLY USED WITH 80464 OPTION
18	G110456	SETSCREW, 1/2-13 X 3 SQ. HEAD	2		
19	G120238	NUT, 1/2 USS JAM	4		
20	G121358-8	NUT, 5/8-18 SAE; GRADE 8	1		
21	G126358	BOLT, 5/16-18 X 1 CARRIAGE; GRADE 5	1		
22	G128001	NUT, 5/16-18 SERRATED FLANGE	1		
23	G128004	NUT, 1/2-13 SERRATED FLANGE	1		
24	G180188	SCREW, 1/2-13 X 2-3/4 USS CAP	1		
25	G451802-8	BOLT, 5/8-11 X 1.3/4 LG. FLANGE	1		
26	S127968	ASSEMBLY, PLOW; RIGHT 37/18 DEG	2		SEE NOTE 1; 26" CUT; INSET #1
27	S127969	ASSEMBLY, PLOW; LEFT 37/18 DEG	2		SEE NOTE 2; 26" CUT; INSET #2
28	S61982-1	ASSEMBLY, DUAL COULTER	1		SEE NOTE 3
29	S94230	ASSEMBLY, 27.1/8 LG COULTER SHANK	4		SEE NOTE 4

THE SUBASSEMBLIES ABOVE CONSIST OF THESE PARTS:

NOTE 1		
61730	BLADE, DIGGER; OUTER RIGHT	1
127945	GUIDE, PLOW ROD; RT 37	1
127968	FROG, BLADE; RIGHT 37/18 DEG.	1
G101536	BOLT, 3/8-16 X 1.1/4 PLOW	3
G101639	BOLT, 3/8-16 X 1.1/2 PLOW	3
G128002	NUT, 3/8-16 SERRATED FLANGE	6
NOTE 2		
61728	BLADE, DIGGER; OUTER LEFT	1
127944	GUIDE, PLOW ROD; LEFT 37	1
127969	FROG, BLADE; LEFT 37/18 DEG.	1
G101536	BOLT, 3/8-16 X 1.1/4 LG.	3
G101639	BOLT, 3/8-16 X 1.1/2 LG.	3
G128002	NUT, 3/8-16 SERRATED FLANGE	6
NOTE 3		
80464M	KIT, BOLT	1
	USED WITH EITHER DUAL OR SINGLE COULTER OPTION	
NOTE 4		
80464	COULTER, DIGGER 2910 SERIES	1
80502	COLLAR, COULTER; "RIGID"	1
94230	SHANK, 27.1/8" LG X 1.1/2"	1
80464M	KIT, BOLT	1
G102887	SETSCREW, 5/16-18 X 1-1/2 SQ. HEAD	1

IMPORTANT NOTE! FROGS ARE MARKED WITH LEFT OR RIGHT DESIGNATIONS AS WELL AS BLADE ANGLE AND SWEEP ANGLE: R or L XX - YY. XX = SWEEP ANGLE; YY = BLADE ANGLE. BEFORE ORDERING REPLACEMENTS, PLEASE REMOVE FROG FROM SHANK AND VERIFY THAT SWEEP ANGLE AND BLADE ANGLE ON FROG MATCHES DESCRIPTION OF PART NUMBER IN CATALOG.

NOTES: - BLADE "LEFT" & "RIGHT" DESIGNATIONS REFER TO LEFT AND/OR RIGHT OF PEANUT ROW.

- PLEASE REFER TO PLOW KIT PAGE THAT CORRESPONDS TO YOUR MACHINE.

- BLADES ARE INSTALLED WITH BEVEL DOWN.

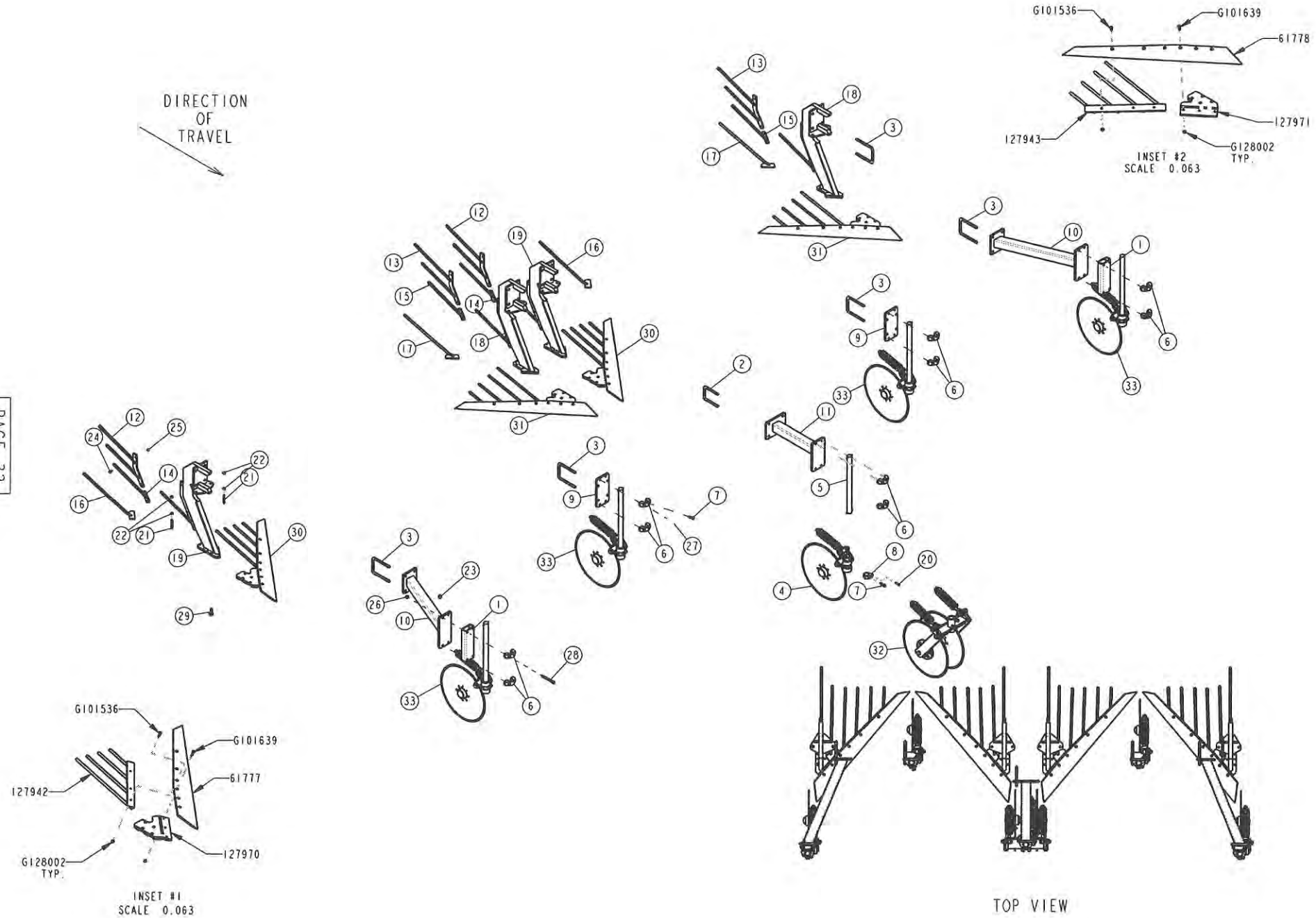
DIRECTION
OF
TRAVEL
G101536
G101639
61778
127943
127971
G128002
TYP.
INSET #2
SCALE 0.063
G101536
G101639
61777
127942
127970
G128002
TYP.
INSET #1
SCALE 0.063
TOP VIEW

KIT #70755 PLOW/COULTER SET-UP
4-ROW 72" & 76" FRAME, 40° SWEEP ANGLE

ITEM	PART NUMBER	DESCRIPTION	QTY SHOWN	QTY REQ'D	COMMENTS
1	20846	SPACER, COULTER MT	2		
2	61948	U-BOLT, 5/8-18 X 4.063 X 5.75; W/NUTS	1		
3	61979	U-BOLT, 5/8-18 X 5-1/16 X 7; W/NUTS	5		
4	80464	ASSEMBLY, COULTER W/BLADE	1		SEE NOTE 3
5	80499	SHANK, 22" LG. X 1.1/2	1		
6	80500	CLAMP, COULTER, 1.1/2	10		
7	80501	SETSCREW,1/2-13X1-1/2 SQ HEAD	2		(10) STANDARD; (1) USED ONLY WITH 80464 OPTION
8	80502	COLLAR, "RIGID" COULTER	1		ONLY USED WITH 80464 OPTION
9	94002	MOUNT, YETTER COULTER	2		
10	94226	MOUNT, ANGLED COULTER	2		
11	94232	MOUNT, CENTER COULTER; 4"	1		
12	94466	MT, GUIDE ROD, SHALLOW SHANK RT	2		
13	94467	MT, GUIDE ROD; SHALLOW SHANK LFT	2		
14	94468	ROD, 3RD LONG; RT	4		
15	94469	ROD, 3RD LONG; LFT	4		
16	94470	ROD, EXTRA; RIGHT	2		
17	94471	ROD, EXTRA; LEFT	2		
18	127918	SHANK, LEFT 40 DIGGER	2		
19	127919	SHANK, RIGHT DIGGER; 40	2		
20	G102887	SETSCREW, 5/16-18 X 1.1/2 SQ HEAD	1		ONLY USED WITH 80464 OPTION
21	G110456	SETSCREW, 1/2-13 X 3 SQ. HEAD	2		
22	G120238	NUT, 1/2 USS JAM	4		
23	G121358-8	NUT, 5/8-18 SAE; GRADE 8	1		
24	G126358	BOLT, 5/16-18 X 1 CARRIAGE; GRADE 5	1		
25	G128001	NUT, 5/16-18 SERRATED FLANGE	1		
26	G128004	NUT, 1/2-13 SERRATED FLANGE	1		
27	G180188	SCREW, 1/2-13 X 2-3/4 USS CAP	1		
28	G433163	SCREW, 1/2-13 X 5 USS CAP	1		
29	G451802-8	BOLT, 5/8-11 X 1.3/4 LG. FLANGE	1		
30	S127970	ASSEMBLY, PLOW; RIGHT 40/20 DEG.	2		SEE NOTE 1; 30" CUT; INSET #1
31	S127971	ASSEMBLY, PLOW LEFT 40/20 DEG	2		SEE NOTE 2; 30" CUT; INSET #2
32	S61982-1	ASSEMBLY, DUAL COULTER	1		SEE NOTE 3
33	S94230	ASSEMBLY, 27.1/8 LG COULTER SHANK	4		SEE NOTE 4

THE SUBASSEMBLIES ABOVE CONSIST OF THESE PARTS:

NOTE 1		
61777	BLADE, CENTER; RIGHT	1
127942	GUIDE, PLOW ROD; RT 40	1
127970	FROG, BLADE; RIGHT 40/20 DEG	1
G101536	BOLT, 3/8-16 X 1.1/4 PLOW	3
G101639	BOLT, 3/8-16 X 1.1/2 PLOW	3
G128002	NUT, 3/8-16 SERRATED FLANGE	6
NOTE 2		
61778	BLADE, CENTER; LEFT	1
127943	GUIDE, PLOW ROD; LEFT 40	1
127971	FROG, BLADE; LEFT 40/20 DEG.	1
G101536	BOLT, 3/8-16 X 1.1/4 PLOW	3
G101639	BOLT, 3/8-16 X 1.1/2 PLOW	3
G128002	NUT, 3/8-16 SERRATED FLANGE	6
NOTE 3		
80464M	KIT, BOLT	1
NOTE 4		
80464	COULTER, DIGGER 2910 SERIES	1
80502	COLLAR, COULTER; "RIGID"	1
94230	SHANK, 27.1/8" LG. X 1.1/2"	1
80464M	KIT, BOLT	1
G102887	SETSCREW, 5/16-18 X 1-1/2 SQ HEAD	

IMPORTANT NOTE! FROGS ARE MARKED WITH LEFT OR RIGHT DESIGNATIONS AS WELL AS BLADE ANGLE AND SWEEP ANGLE: R or L XX - YY. XX = SWEEP ANGLE; YY = BLADE ANGLE. BEFORE ORDERING REPLACEMENTS, PLEASE REMOVE FROG FROM SHANK AND VERIFY THAT SWEEP ANGLE AND BLADE ANGLE ON FROG MATCHES DESCRIPTION OF PART NUMBER IN CATALOG.

NOTES: - BLADE "LEFT" & "RIGHT" DESIGNATIONS REFER TO LEFT AND/OR RIGHT OF PEANUT ROW.

- PLEASE REFER TO PLOW KIT PAGE THAT CORRESPONDS TO YOUR MACHINE.

- BLADES ARE INSTALLED WITH BEVEL DOWN.

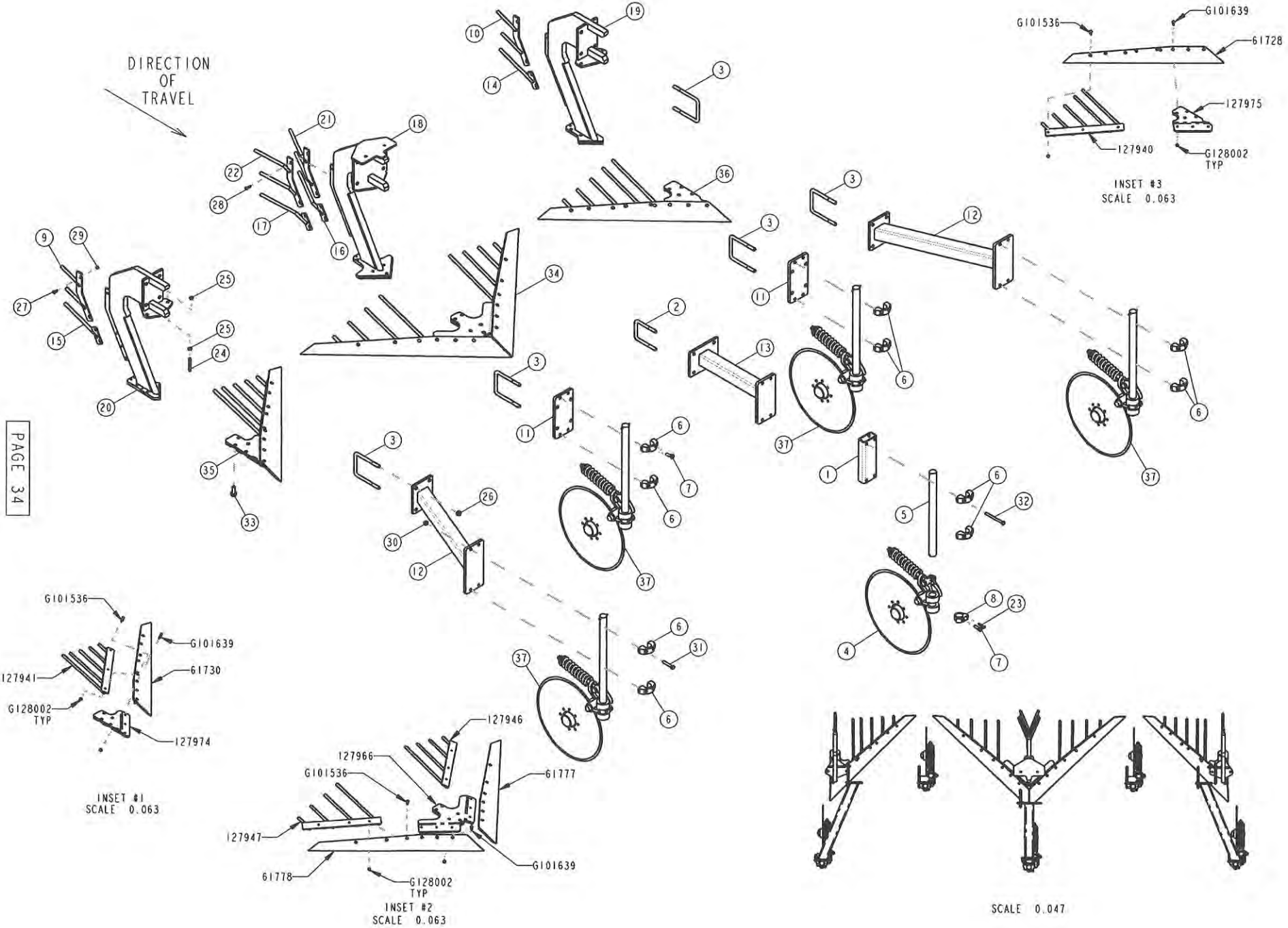
DIRECTION OF TRAVEL
PAGE 34
INSET #1
SCALE 0.063
INSET #2
SCALE 0.063
INSET #3
SCALE 0.063
SCALE 0.047
G101536
G101639
61728
127975
127940
G128002 TYP
61730
127941
127974
127946
127966
61777
127947
61778

KIT #70756 PLOW/COULTER SET-UP
4-ROW 72" & 76" FRAME, 23° BLADE ANGLE

ITEM	PART NUMBER	DESCRIPTION	QTY SHOWN	QTY REQ'D	COMMENTS
1	20888	SPACER, DROPPED COULTER MT	1		
2	61948	U-BOLT, 5/8-18 X 4.063 X 5.75; W/NUTS	1	2	
3	61979	U-BOLT, 5/8-18 X 5-1/16 X 7; W/NUTS	5	14	
4	80464	ASSEMBLY, COULTER W/BLADE	1		SEE NOTE 4 - ON ORDER CHECK-OFF SHEET
5	80499	SHANK, 22" LG. X 1.1/2	1		
6	80500	CLAMP, COULTER, 1.1/2	10		
7	80501	SETSCREW,1/2-13X1-1/2 SQ HEAD	2	11	
8	80502	COLLAR, "RIGID" COULTER	1		
9	93692	MOUNT, GUIDE ROD; LEFT	1		
10	93693	MOUNT, GUIDE ROD; RIGHT	1		
11	94002	MOUNT, YETTER COULTER	2		
12	94226	MOUNT, ANGLED COULTER	2		
13	94232	MOUNT, CENTER COULTER; 4"	1		
14	94348	ROD, 3RD; LEFT	1		
15	94349	ROD, 3RD; RIGHT	1		
16	94350	ROD, 3RD; V LEFT	1		
17	94351	ROD, 3RD; V RIGHT	1		
18	127917	SHANK, CENTER V DIGGER	1		
19	127920	SHANK, LEFT DIGGER; 45	1		
20	127921	SHANK, RIGHT DIGGER; 45	1		
21	127926	MOUNT,V BLADE GUIDE ROD; LFT	1		
22	127927	MOUNT,V BLADE GUIDE ROD; RT	1		
23	G102887	SETSCREW, 5/16-18 X 1.1/2 SQ HEAD	1		
24	G110456	SETSCREW, 1/2-13 X 3 SQ. HEAD	1	6	
25	G120238	NUT, 1/2 USS JAM	2	12	
26	G121358-8	NUT, 5/8-18 SAE; GRADE 8	1	A/R	
27	G126358	BOLT, 5/16-18 X 1 CARRIAGE; GRADE 5	1	4	
28	G126370	BOLT, 5/16-18 X 1-1/4 CARRIAGE	1	2	
29	G128001	NUT, 5/16-18 SERRATED FLANGE	1	6	
30	G128004	NUT, 1/2-13 SERRATED FLANGE	1	20	
31	G180188	SCREW, 1/2-13 X 2-3/4 USS CAP	1	16	
32	G433163	SCREW, 1/2-13 X 5 USS CAP	1	4	
33	G451802-8	BOLT, 5/8-11 X 1.3/4 LG. FLANGE	1	13	
34	S127966	ASSEMBLY, PLOW; CENTER "V" 23 DEGREE	1		SEE NOTE 1; INSET #2
35	S127974	ASSEMBLY, PLOW; RIGHT 45/23DEG	1		SEE NOTE 2; 30" CUT; INSET #1
36	S127975	ASSEMBLY, PLOW; LEFT 45/23DEG	1		SEE NOTE 3; 30" CUT; INSET #3
37	S94230	ASSEMBLY, 27.1/8 LG COULTER SHANK	4		SEE NOTE 5

THE SUBASSEMBLIES ABOVE CONSIST OF THESE PARTS:

NOTE 1		
61777	BLADE, CENTER; RIGHT	1
61778	BLADE, CENTER; LEFT	1
127946	GUIDE, PLOW ROD; LEFT V	1
127947	GUIDE, PLOW ROD; RIGHT V	1
127966	FROG, CENTER V BLADE; 23 DEG	1
G101536	BOLT, 3/8-16 X 1-1/4 PLOW	6
G101639	BOLT, 3/8-16 X 1-1/2 PLOW	6
G128002	NUT, 3/8-16 SERRATED FLANGE	12
NOTE 2		
61730	BLADE, DIGGER; OUTER RIGHT	1
127941	GUIDE, PLOW ROD; RT 45	1
127974	FROG, BLADE; RIGHT 45/23 DEG.	1
G101536	BOLT, 3/8-16 X 1-1/4 PLOW	3
G101639	BOLT, 3/8-16 X 1-1/2 PLOW	3
G128002	NUT, 3/8-16 SERRATED FLANGE	6
NOTE 3		
61728	BLADE, DIGGER; OUTER LEFT	1
127940	GUIDE, PLOW ROD; LEFT 45	1
127975	FROG, BLADE; LEFT 45/23 DEG.	1
G101536	BOLT, 3/8-16 X 1-1/4 PLOW	3
G101639	BOLT, 3/8-16 X 1-1/2 PLOW	3
G128002	NUT, 3/8-16 SERRATED FLANGE	6
NOTE 4		
80464M	KIT, BOLT	1
NOTE 5		
80464	COULTER, DIGGER 2910 SERIES	1
80502	COLLAR, COULTER; "RIGID"	1
94230	SHANK, 27-1/8" LG X 1-1/2	1
80464M	KIT, BOLT	1
G102887	SETSCREW, 5/16-18 X 1.1/2 SQ HEAD	1

IMPORTANT NOTE! FROGS ARE MARKED WITH LEFT OR RIGHT DESIGNATIONS AS WELL AS BLADE ANGLE AND SWEEP ANGLE: R or L XX - YY. XX = SWEEP ANGLE; YY = BLADE ANGLE. BEFORE ORDERING REPLACEMENTS, PLEASE REMOVE FROG FROM SHANK AND VERIFY THAT SWEEP ANGLE AND BLADE ANGLE ON FROG MATCHES DESCRIPTION OF PART NUMBER IN CATALOG.

NOTES:
- BLADE "LEFT" & "RIGHT" DESIGNATIONS REFER TO LEFT AND/OR RIGHT OF PEANUT ROW.
- PLEASE REFER TO PLOW KIT PAGE THAT CORRESPONDS TO YOUR MACHINE.
- BLADES ARE INSTALLED WITH BEVEL DOWN.

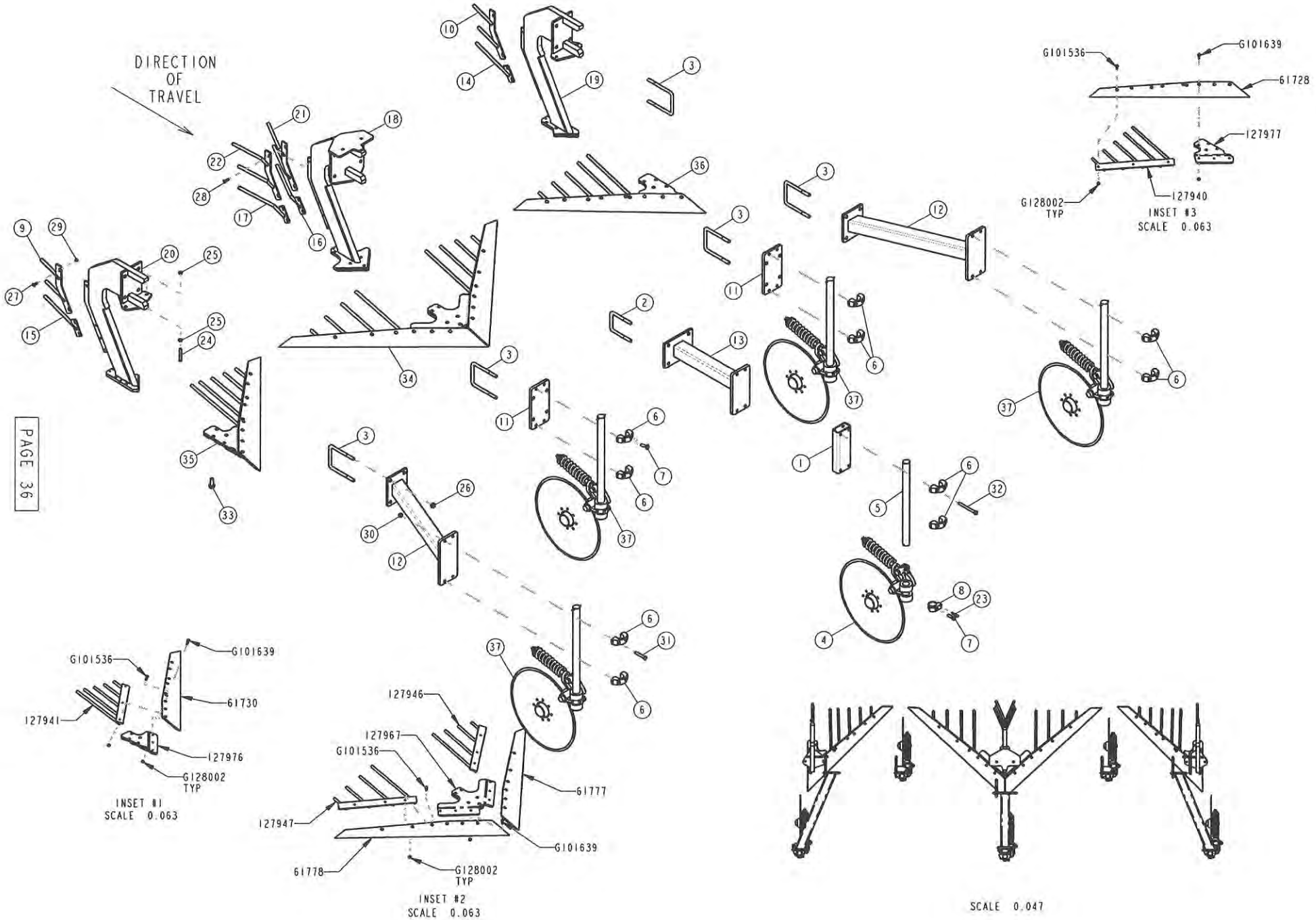
DIRECTION OF TRAVEL
PAGE 36
G101536
G101639
61728
127977
G128002 TYP
127940
INSET #3
SCALE 0.063
G101536
G101639
61730
127941
127976
G128002 TYP
INSET #1
SCALE 0.063
127946
127967
G101536
61777
127947
G101639
61778
G128002 TYP
INSET #2
SCALE 0.063
SCALE 0.047

KIT #70760 PLOW/COULTER SET-UP
4-ROW 72" & 76" FRAME, 18° BLADE ANGLE

ITEM	PART NUMBER	DESCRIPTION	QTY SHOWN	QTY REQ'D	COMMENTS
1	20888	SPACER, DROPPED COULTER MT	1		
2	61948	U-BOLT, 5/8-18 X 4.063 X 5.75; W/NUTS	1	2	
3	61979	U-BOLT, 5/8-18 X 5-1/16 X 7; W/NUTS	5	14	
4	80464	ASSEMBLY, COULTER W/BLADE	1		SEE NOTE 4 - ON ORDER CHECK-OFF SHEET
5	80499	SHANK, 22" LG. X 1.1/2	1		
6	80500	CLAMP, COULTER, 1.1/2	10		
7	80501	SETSCREW,1/2-13X1-1/2 SQ HEAD	2	11	
8	80502	COLLAR, "RIGID" COULTER	1		
9	93692	MOUNT, GUIDE ROD; LEFT	1		
10	93693	MOUNT, GUIDE ROD; RIGHT	1		
11	94002	MOUNT, YETTER COULTER	2		
12	94226	MOUNT, ANGLED COULTER	2		
13	94232	MOUNT, CENTER COULTER; 4"	1		
14	94348	ROD, 3RD; LEFT	1		
15	94349	ROD, 3RD; RIGHT	1		
16	94350	ROD, 3RD; V LEFT	1		
17	94351	ROD, 3RD; V RIGHT	1		
18	127917	SHANK, CENTER V DIGGER	1		
19	127920	SHANK, LEFT DIGGER; 45	1		
20	127921	SHANK, RIGHT DIGGER; 45	1		
21	127926	MOUNT,V BLADE GUIDE ROD; LFT	1		
22	127927	MOUNT,V BLADE GUIDE ROD; RT	1		
23	G102887	SETSCREW, 5/16-18 X 1.1/2 SQ HEAD	1		
24	G110456	SETSCREW, 1/2-13 X 3 SQ. HEAD	1	6	
25	G120238	NUT, 1/2 USS JAM	2	12	
26	G121358-8	NUT, 5/8-18 SAE; GRADE 8	1	A/R	
27	G126358	BOLT, 5/16-18 X 1 CARRIAGE; GRADE 5	1	4	
28	G126370	BOLT, 5/16-18 X 1-1/4 CARRIAGE	1	2	
29	G128001	NUT, 5/16-18 SERRATED FLANGE	1	6	
30	G128004	NUT, 1/2-13 SERRATED FLANGE	1	20	
31	G180188	SCREW, 1/2-13 X 2-3/4 USS CAP	1	16	
32	G433163	SCREW, 1/2-13 X 5 USS CAP	1	4	
33	G451802-8	BOLT, 5/8-11 X 1.3/4 LG. FLANGE	1	13	
34	S127967	ASSEMBLY, PLOW; CENTER "V" 18 DEGREE	1		SEE NOTE 1; INSET #2
35	S127976	ASSEMBLY, PLOW;RIGHT 45/18	1		SEE NOTE 2; 30" CUT; INSET #1
36	S127977	ASSEMBLY, PLOW; LEFT 45/18 DEG.	1		SEE NOTE 3; 30" CUT; INSET #3
37	S94230	ASSEMBLY, 27.1/8 LG COULTER SHANK	4		SEE NOTE 5

THE SUBASSEMBLIES ABOVE CONSIST OF THESE PARTS:

NOTE 1		
61777	BLADE, CENTER; RIGHT	1
61778	BLADE, CENTER; LEFT	1
127946	GUIDE, PLOW ROD; LEFT V	1
127947	GUIDE, PLOW ROD; RIGHT V	1
127967	FROG, CENTER V BLADE; 18 DEG	1
G101536	BOLT, 3/8-16 X 1-1/4 PLOW	6
G101639	BOLT, 3/8-16 X 1-1/2 PLOW	6
G128002	NUT, 3/8-16 SERRATED FLANGE	12
NOTE 2		
61730	BLADE, DIGGER; OUTER RIGHT	1
127941	GUIDE, PLOW ROD; RT 45	1
127976	FROG, BLADE; RIGHT 45/18 DEG.	1
G101536	BOLT, 3/8-16 X 1-1/4 PLOW	3
G101639	BOLT, 3/8-16 X 1-1/2 PLOW	3
G128002	NUT, 3/8-16 SERRATED FLANGE	6
NOTE 3		
61728	BLADE, DIGGER; OUTER LEFT	1
127940	GUIDE, PLOW ROD; LEFT 45	1
127977	FROG, BLADE; LEFT 45/18 DEG.	1
G101536	BOLT, 3/8-16 X 1-1/4 PLOW	3
G101639	BOLT, 3/8-16 X 1-1/2 PLOW	3
G128002	NUT, 3/8-16 SERRATED FLANGE	6
NOTE 4		
80464M	KIT, BOLT	1
NOTE 5		
80464	COULTER, DIGGER 2910 SERIES	1
80502	COLLAR, COULTER; "RIGID"	1
94230	SHANK, 27-1/8" LG X 1-1/2	1
80464M	KIT, BOLT	1
G102887	SETSCREW, 5/16-18 X 1.1/2 SQ HEAD	1

IMPORTANT NOTE! FROGS ARE MARKED WITH LEFT OR RIGHT DESIGNATIONS AS WELL AS BLADE ANGLE AND SWEEP ANGLE: R or L XX - YY. XX = SWEEP ANGLE; YY = BLADE ANGLE. BEFORE ORDERING REPLACEMENTS, PLEASE REMOVE FROG FROM SHANK AND VERIFY THAT SWEEP ANGLE AND BLADE ANGLE ON FROG MATCHES DESCRIPTION OF PART NUMBER IN CATALOG.

NOTES:
- BLADE "LEFT" & "RIGHT" DESIGNATIONS REFER TO LEFT AND/OR RIGHT OF PEANUT ROW.
- PLEASE REFER TO PLOW KIT PAGE THAT CORRESPONDS TO YOUR MACHINE.
- BLADES ARE INSTALLED WITH BEVEL DOWN.

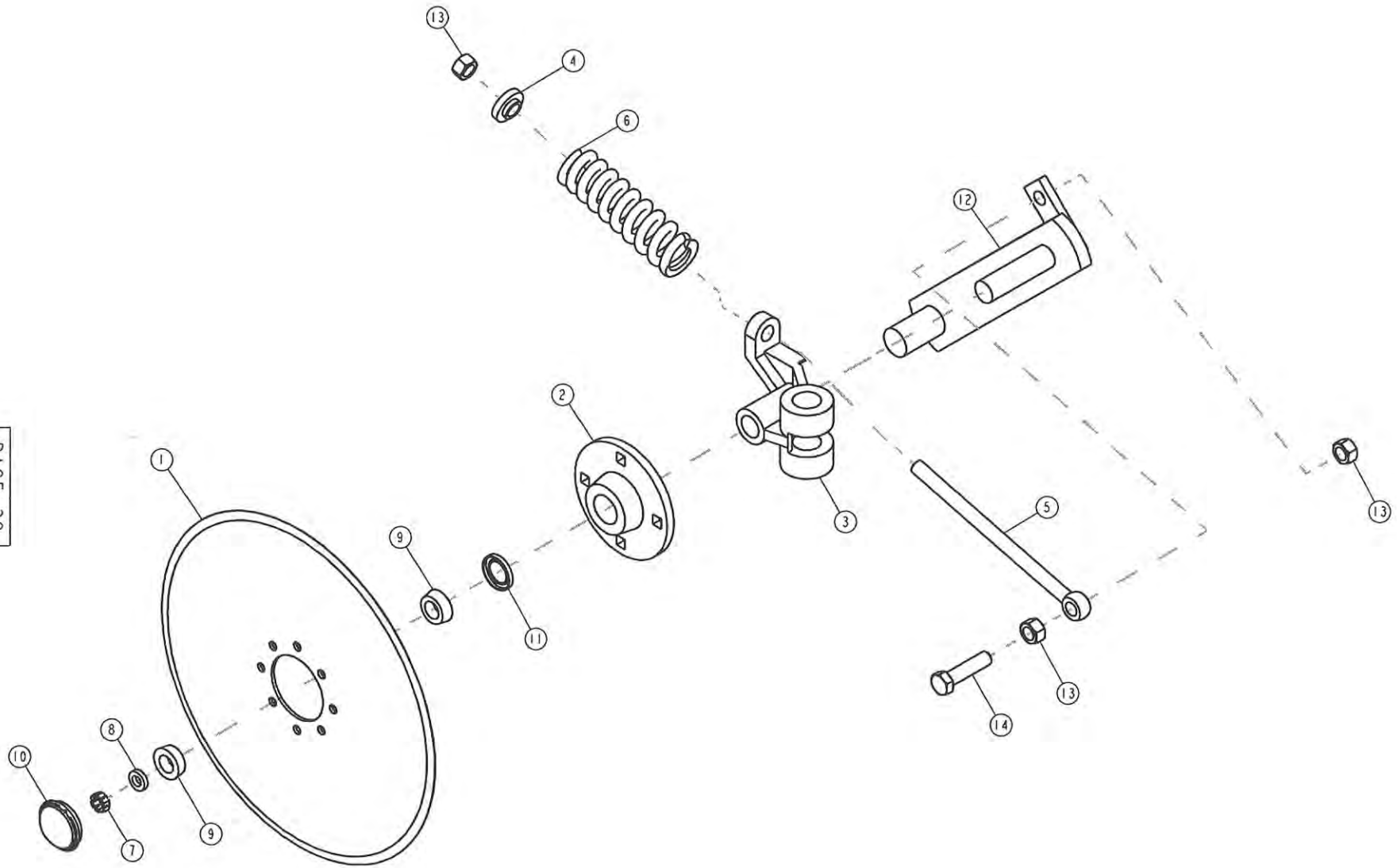
13
4
6
12
2
3
13
5
1
9
11
13
14
8
10
9
7

SINGLE COULTER ASSEMBLY

ITEM	PART NUMBER	DESCRIPTION	QTY SHOWN	QTY REQ'D	COMMENTS
1	80464A	DISC, COULTER	1		
2	80464B	HUB, COULTER	1		
3	80464C	PIVOT, COULTER	1		
4	80464D	WASHER, COULTER	1		
5	80464E	ROD, COULTER	1		
6	80464F	SPRING, #33 COMPRESSION	1		
7	80464G	NUT, 5/8-18 SLOTTED HEX	1		
8	80464H	WASHER, 5/8	1		
9	80464J	CONE, LM67048	2		
10	80464K	CAP, HUB	1		
11	80464L	SEAL, CR16069	1		
12	80464Q	ASSEMBLY, COULTER MOUNT	1		
13	G220086	NUT, 3/4-10 USS	3		
14	G271775	SCREW, 3/4-10 X 3 USS CAP	1		

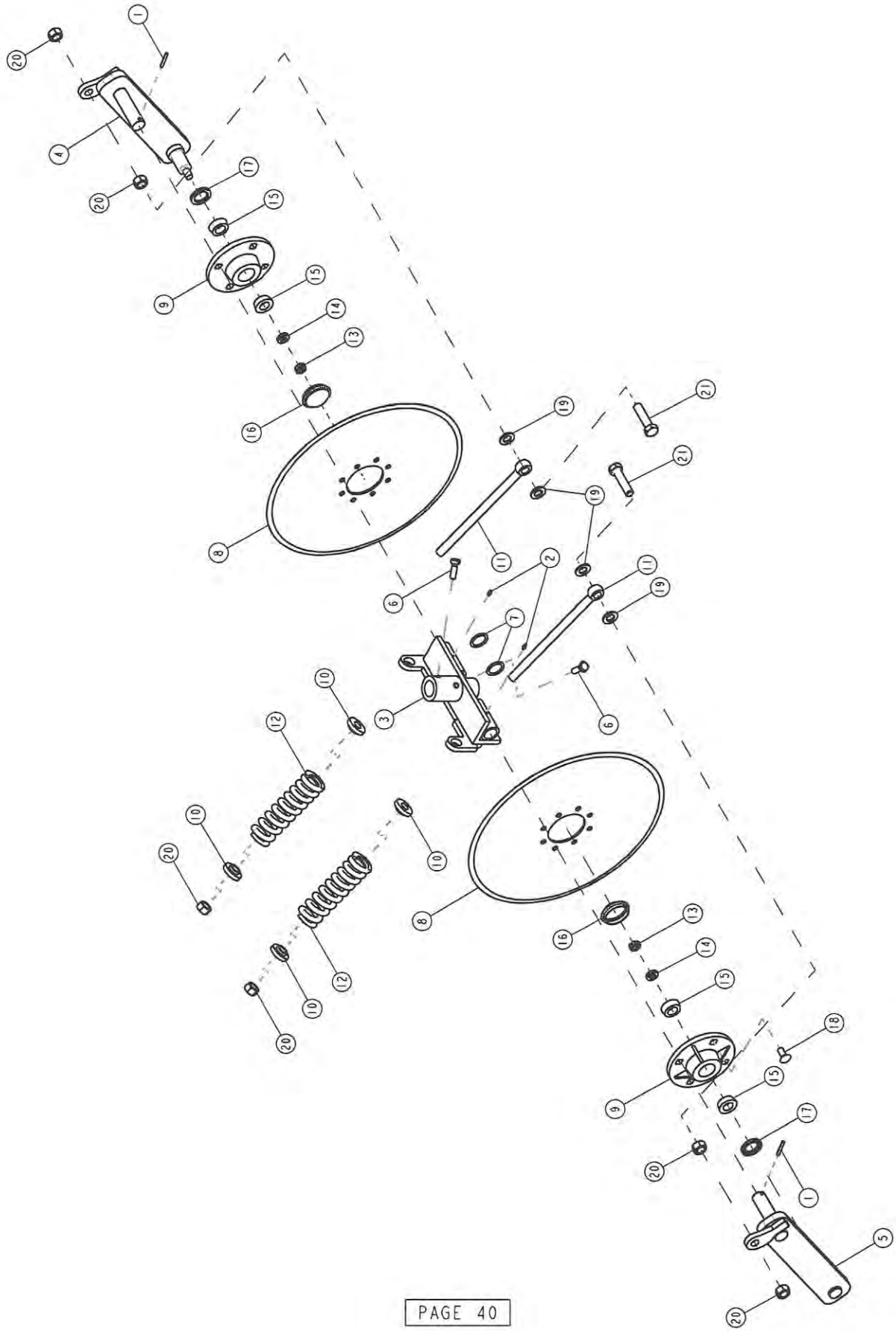
1
20
4
17
15
9
14
13
16
8
19
21
11
2
6
7
3
10
12
5
18

S61982-1 DUAL COULTER ASSEMBLY

ITEM	PART NUMBER	DESCRIPTION	QTY SHOWN	QTY REQ'D	COMMENTS
1	2015	ROLL PIN, 1/4 X 1-3/4	2		
2	2246	FITTING, GREASE;1/4-28 X 1/2 LG	2		
3	61982	DUAL COULTER ASM	1		
4	61983	ARM, LT INDEPENDENT COULTER	1		
5	61984	ARM, RT INDEPENDENT COULTER	1		
6	80501	SETSCREW,1/2-13X1-1/2 SQ HEAD	2		
7	128087	WASHER, 1-1/4 ID X 1-3/4 OD	2		
8	80464A	DISC, COULTER	2		
9	80464B	HUB, COULTER	2		
10	80464D	WASHER, COULTER	4		
11	80464E	ROD, COULTER	2		
12	80464F	SPRING, #33 COMPRESSION	2		
13	80464G	NUT, 5/8-18 SLOTTED HEX	2		
14	80464H	WASHER, 5/8	2		
15	80464J	CONE, LM67048	4		
16	80464K	CAP, HUB	2		
17	80464L	SEAL, CR16069	2		
18	G120916	BOLT,1/2-13 X 1-1/4 LG. CARRIAGE	1	8	
19	G131017	WASHER, 3/4 SAE FLAT	4		
20	G220086	NUT, 3/4-10 USS	6		
21	G271775	SCREW, 3/4-10 X 3 USS CAP	2		

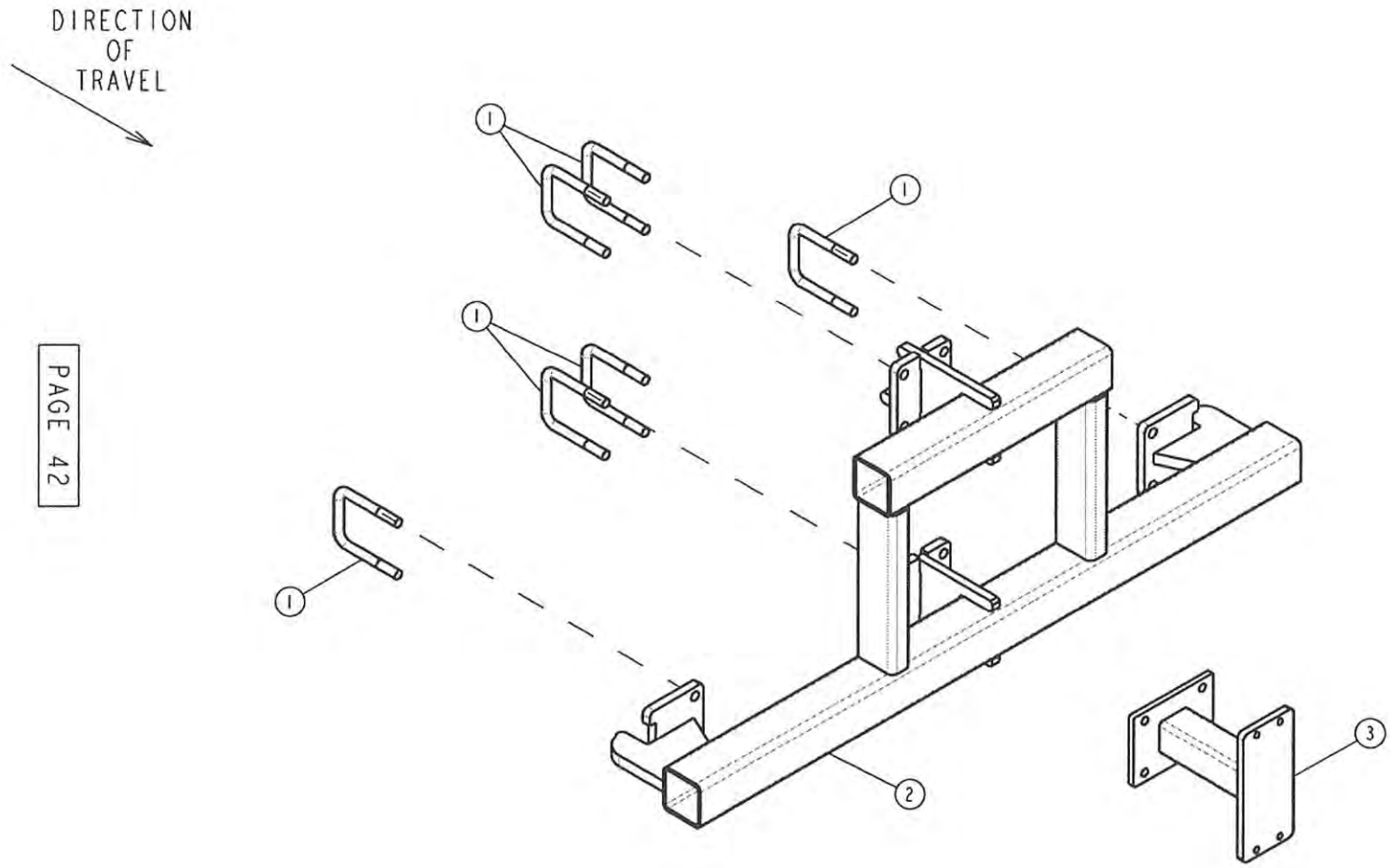
DIRECTION
OF
TRAVEL
1
1
1
1
2
3

#70769 4-ROW HITCH EXTENSION KIT - OPTIONAL

ITEM	PART NUMBER	DESCRIPTION	QTY SHOWN	QTY REQ'D	COMMENTS
1	1836	U-BOLT, 3/4-16 X 6 LG X 4-1/16 W	6		
2	94256	EXTENSION, HITCH; 4 ROW	1		
3	94258	MOUNT, CENTER COULTER;4"	1		

WARNING
Do Not Operate unless all Safety Shields & Guards are in place.
8547

1

DANGER
While in Operation, Do Not Climb on this machine.
Do Not Place Hands behind Shields.
8182

2

Remember
SAFETY
Read Operators Manual Before Starting
8189

3

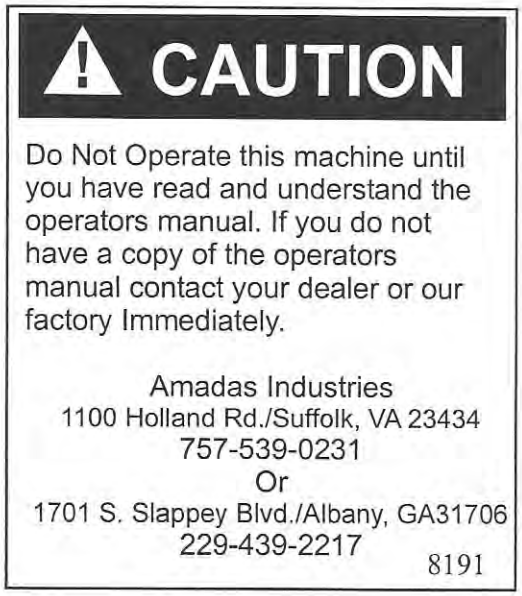
CAUTION
Do Not Operate this machine until you have read and understand the operators manual. If you do not have a copy of the operators manual contact your dealer or our factory Immediately.
Amadas Industries
1100 Holland Rd./Suffolk, VA 23434
757-539-0231
Or
1701 S. Slappey Blvd./Albany, GA31706
229-439-2217
8191

4

CAUTION
1) Keep all shields in place while machinery is in operation.
2) Disengage power before proceeding to adjust, lubricate, clean, unclog, or otherwise work on the machine unless specifically recommended in the operators manual.
3) Wait for all motion to stop before servicing this machine.
4) Keep hands, feet, and clothing away from moving parts.
5) Keep off equipment unless seat or platform for operator is provided.
6) Keep all other persons off
7) Make certain everyone is clear of machinery before engine or operation.
8190

5

ADI-436 & ADI-438 DECAL SECTION

ITEM	PART NUMBER	DESCRIPTION	QTY SHOWN	QTY REQ'D	COMMENTS
1	8547	DECAL, WARNING: DO NOT OPERATE...SHIELDS	1	4	
2	8182	DECAL, "DANGER" DO NOT CLIMB	1	2	
3	8189	DECAL, !SAFETY! READ OP. MANUAL	1	2	
4	8191	DECAL, CAUTION; READ OPERATOR'S MANUAL	1		
5	8190	DECAL, "CAUTION" (LIST)	1		
		THE FOLLOWING DECALS ARE USED BUT ARE NOT SHOWN			
	80466	DECAL, ADI-4 YIELDSAVER; WHITE/RED		2	
	80468	DECAL, "AMADAS"; 3" X 26.5"; WHITE		2	
	80471	DECAL, 47" FLAG		2	
	80473	DECAL, 26" AMADAS W/FLAG		4	
	80548	DECAL, INVERTER ROD SET-UP "V"		1	TWIN V INVERTER ONLY
	80549	DECAL, INVERTER ROD SET-UP "STRAIGHT"		1	STRAIGHT INVERTER ONLY
	80589	DECAL, SHAFT LOCATION; S94276LT/S94276RT		A/R	SANDWICH INVERTER ONLY
	80603	DECAL, SANDWICH ROD SET-UP		1	SANDWICH KITS ONLY

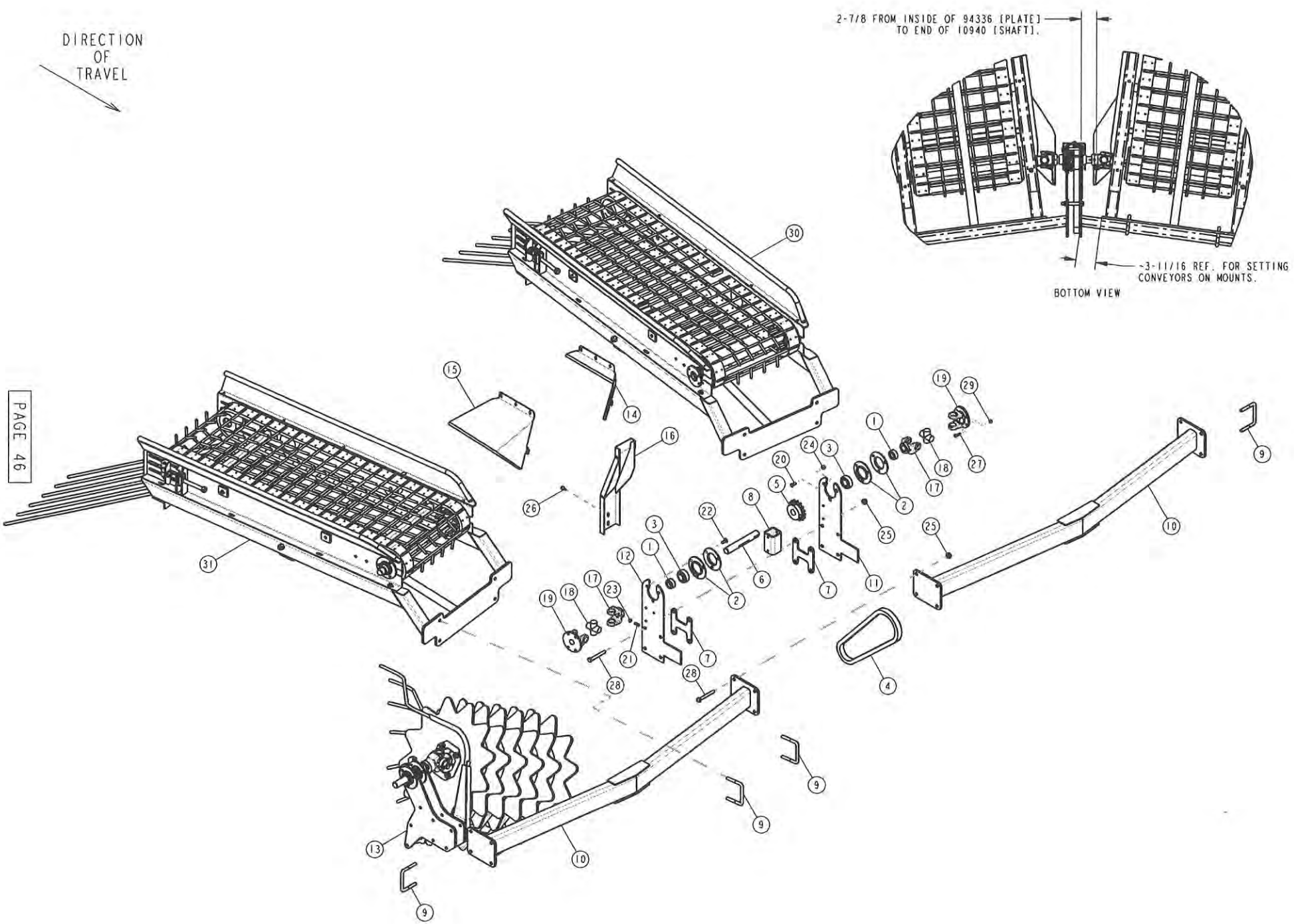
DIRECTION OF TRAVEL
2-7/8 FROM INSIDE OF 94336 [PLATE] TO END OF 10940 [SHAFT].
~3-11/16 REF. FOR SETTING CONVEYORS ON MOUNTS.
BOTTOM VIEW
30
15
14
16
26
31
1
2
3
4
5
6
7
8
9
10
11
12
13
17
18
19
20
21
22
23
24
25
27
28
29

4-ROW 36" & 38" SANDWICH INVERSION KIT

ITEM	PART NUMBER	DESCRIPTION	QTY SHOWN	QTY REQ'D	COMMENTS
1	3005	COLLAR, 1.3/16 ECC. LOCKING	2	A/R	
2	3093	FLANGETTE, 62MS FOR 1.3/16 BEARING	4		
3	3096	INSERT, 1.3/16 REPLACEMENT BEARING	2		
4	4043-57	CHAIN, NO. 60, 55 PITCHES + CONNECTOR	1		
5	5198	SPROCKET, 60B16 F1-3/16	1		
6	10940	SHAFT, SANDWICH KIT DRIVE	1		
7	20877	SPACER, INVERTER MOUNT	2		
8	20896	SPACER, SANDWICH DRIVE	1		
9	61931	U-BOLT 1/2	4	8	
10	94273	MOUNT, SANDWICH KIT; 36"	2		--SEE NOTE 1--
11	94279	PLATE, BEARING MOUNT; INVERTER	1		
12	94336	PLATE, BEARING MOUNT; INVERTER	1		
13	94352_INV_CAT	SEE 4-ROW 36"/38" TWIN V INVERTER KIT FOR COMPONENT DETAILS	1		--SEE NOTE 3--
14	127991	DEFLECTOR, VINE; RIGHT	1		
15	128009	DEFLECTOR, VINE; LEFT	1		
16	128070	SHIELD, SANDWICH DRIVE	1		
17	11379A	YOKE, 1-3/16 BORE X 3.25 LENGTH	2		--SEE NOTE 2--
18	11379B	SPIDER, 1-1/4 X 3-7/32 OA	2		--SEE NOTE 2--
19	11379C	YOKE, 4-3/8 FLANGE	2		--SEE NOTE 2--
20	G101637	BOLT, 3/8-16 X 1 PLOW	1	3	
21	G102894	SETSCREW,3/8-16 X 3/4 SQ. HEAD	1	4	
22	G120915	BOLT, 3/8-16 X 1 CARRIAGE; GRADE 5	1	3	
23	G124829	NUT, 3/8-16 USS JAM	1	4	
24	G128002	NUT, 3/8-16 SERRATED FLANGE	1	6	
25	G128004	NUT, 1/2-13 SERRATED FLANGE	2	8	
26	G180077T	SCREW, 5/16-18 X 3/4 TAP. WASHERHEAD	1	2	
27	G180079	SCREW, 5/16-18 X 1 USS CAP	1	8	
28	G180193	SCREW, 1/2-13 X 3-3/4 USS CAP	2	8	
29	G431798	LOCKNUT, 5/16-18 USS NYLOCK HEX	1	8	
30	S94276LT	FRAME, SANDWICH CONVEYOR, TUBULAR	1		
31	S94276RT	DECAL, SANDWICH ROD SET-UP	1		

--NOTE 1--			
PART NUMBER	DESCRIPTION	QTY REQ'D	COMMENTS
94273	MOUNT, SANDWICH KIT; 36"	2	AD1-436
94272	MOUNT, SANDWICH KIT; 38"	2	AD1-438
--NOTE 2--			
---	COMPLETE UNIT = 11379	2	
--NOTE 3--			
ONLY RIGHT INVERTER SHOWN; LEFT INVERTER ALSO REQUIRED			

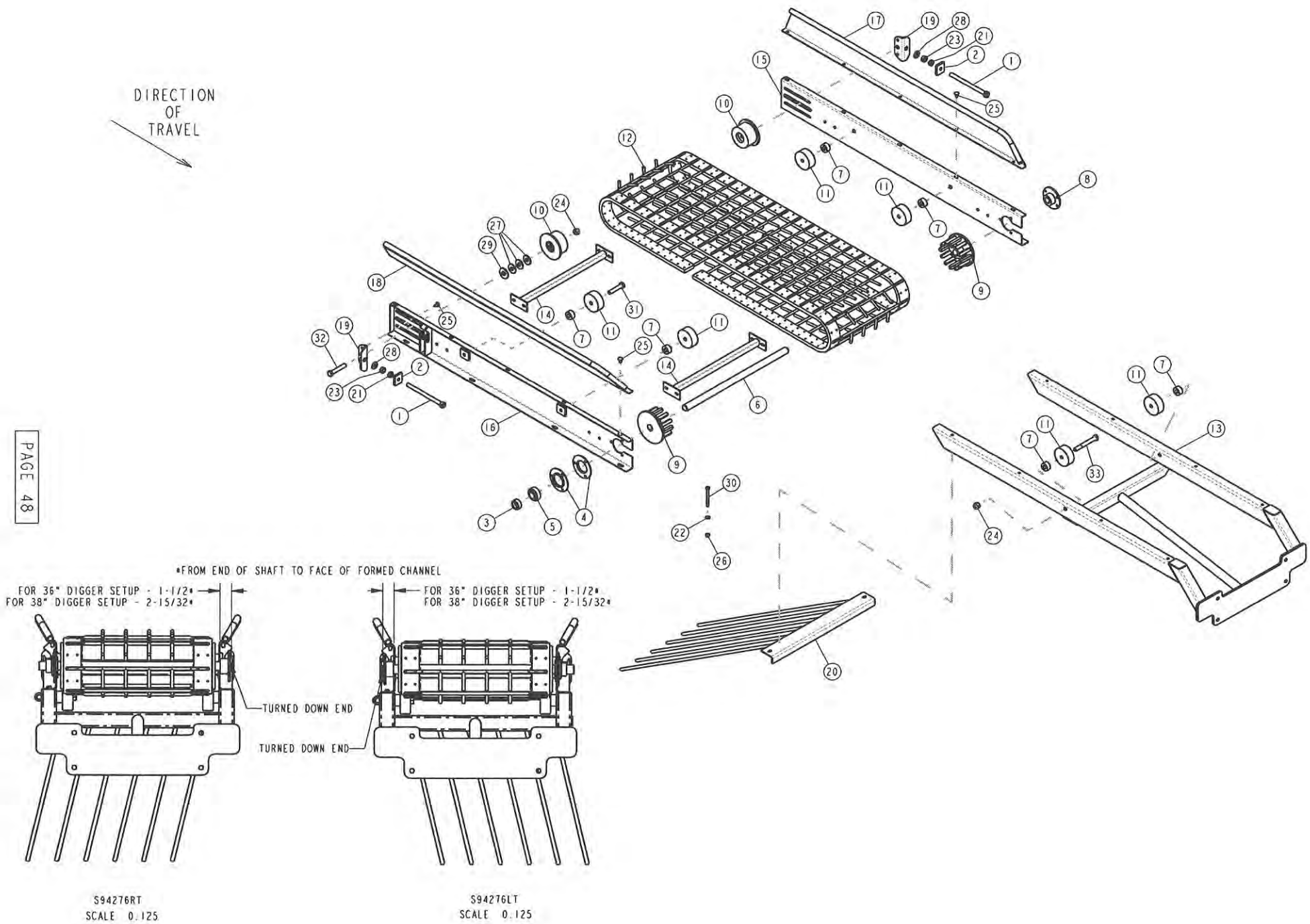

S94276RT
SCALE 0.125

S94276LT
SCALE 0.125

S94276RT AND/OR S94276LT SANDWICH CONVEYOR FRAME

ITEM	PART NUMBER	DESCRIPTION	QTY SHOWN	QTY REQ'D	COMMENTS
1	1825	ROD, ADJUSTING	2		
2	2020	NUT, 5/8-11,2X1-3/4 IDLER ADJ	2		
3	3005	COLLAR, 1.3/16 ECC. LOCKING	1	A/R	
4	3093	FLANGETTE, 62MS FOR 1.3/16 BEARING	2		
5	3096	INSERT, 1.3/16 REPLACEMENT BEARING	1		
6	10939	SHAFT, SANDWICH KIT CONVEYOR	1		SEE DIAGRAM FOR SHAFT INSET FOR S94276RT & S94276LT
7	20830	SPACER, 1.50 OD X .671 ID X .75 LONG	6		
8	20895	BUSHING, SANDWICH KIT DRIVE	1		
9	51699	SPROCKET, 12 PIN 40P HIGH PRO	2		
10	51700	IDLER, 4" FLANGED, BLACK ACE	2		
11	80491	SNUGULATOR, 1-3/8 W; 5/8 BORE	6		
12	80562	SANDWICH BELT, PINS	1		STANDARD -- SEE NOTE 1
13	94276	FRAME, SANDWICH KIT; TUBULAR	1		
14	94281	BRACE, SANDWICH CONVEYOR	2		
15	128019	SIDE, SANDWICH CONVEYOR, LFT	1		
16	128020	SIDE, SANDWICH CONVEYOR; RT	1		
17	128021	FENDER, SANDWICH; LEFT	1		
18	128022	FENDER, SANDWICH CONVEYOR, RT	1		
19	128032	BRACKET, SANDWICH KIT TAKE UP	2		
20	128117	MOUNT, SANDWICH ROD, RT	1		128116 - 1 EA. - S94276LT
21	G120240	NUT, 5/8-11 USS JAM	2		
22	G120394	WASHER, 3/8 SAE FLAT	8		
23	G124589	NUT, 5/8-11 USS	2		
24	G124590	LOCKNUT, 5/8-11 NYLOCK	4		
25	G126227	BOLT, 3/8-16 X 3/4 CARRIAGE; GR. 5	25		
26	G128002	NUT, 3/8-16 SERRATED FLANGE	33		
27	G131015	WASHER, 5/8 USS FLAT	6		
28	G131016	WASHER, 5/8 SAE FLAT	2		
29	G131090	WASHER, 3/4 USS FLAT	2		
30	G189307	SCREW, 3/8-16 X 3-3/4 USS CAP	8		
31	G271727	SCREW, 5/8-11 X 3 USS CAP	4		
32	G271729	SCREW, 5/8-11 X 3.1/2 USS CAP	2		
33	G271735	SCREW, 5/8-11 X 5 USS CAP	2		

-- NOTE 1 --			
80638	CONVEYOR,VIRGINIA; 19-3/4" SANDWICH	1	VIRGINIA STYLE PEANUTS
CONVERSION KIT AVAILABLE -- 70968			

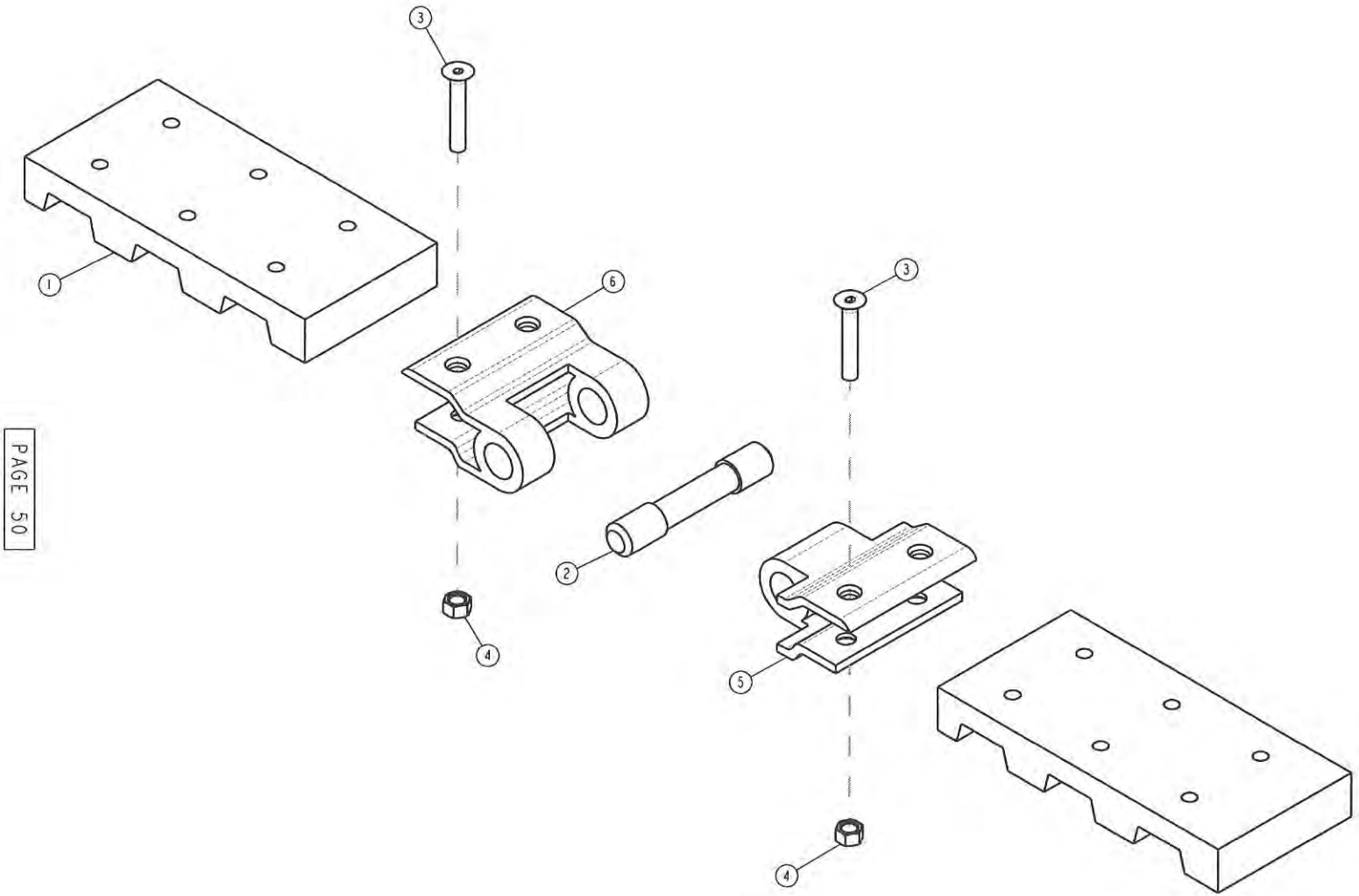
3
1
6
3
2
4
5
4

0352 - BELT CONNECTING KIT - 19-3/4" SANDWICH

ITEM	PART NUMBER	DESCRIPTION	QTY SHOWN	QTY REQ'D	COMMENTS
1	80562	BELT, SECTION	2		
2	80522L	PIN, 11.8MM BELT CONNECTING	1		
3	80522M	BOLT,10-32 BELT CLIP	4		
4	80522N	NUT,10-32 BELT CLIP	4		
5	80574C	CLIP, BELT CONNECTING;MALE	1		
6	80574D	CLIP, BELT CONNECTING;FEMALE	1		

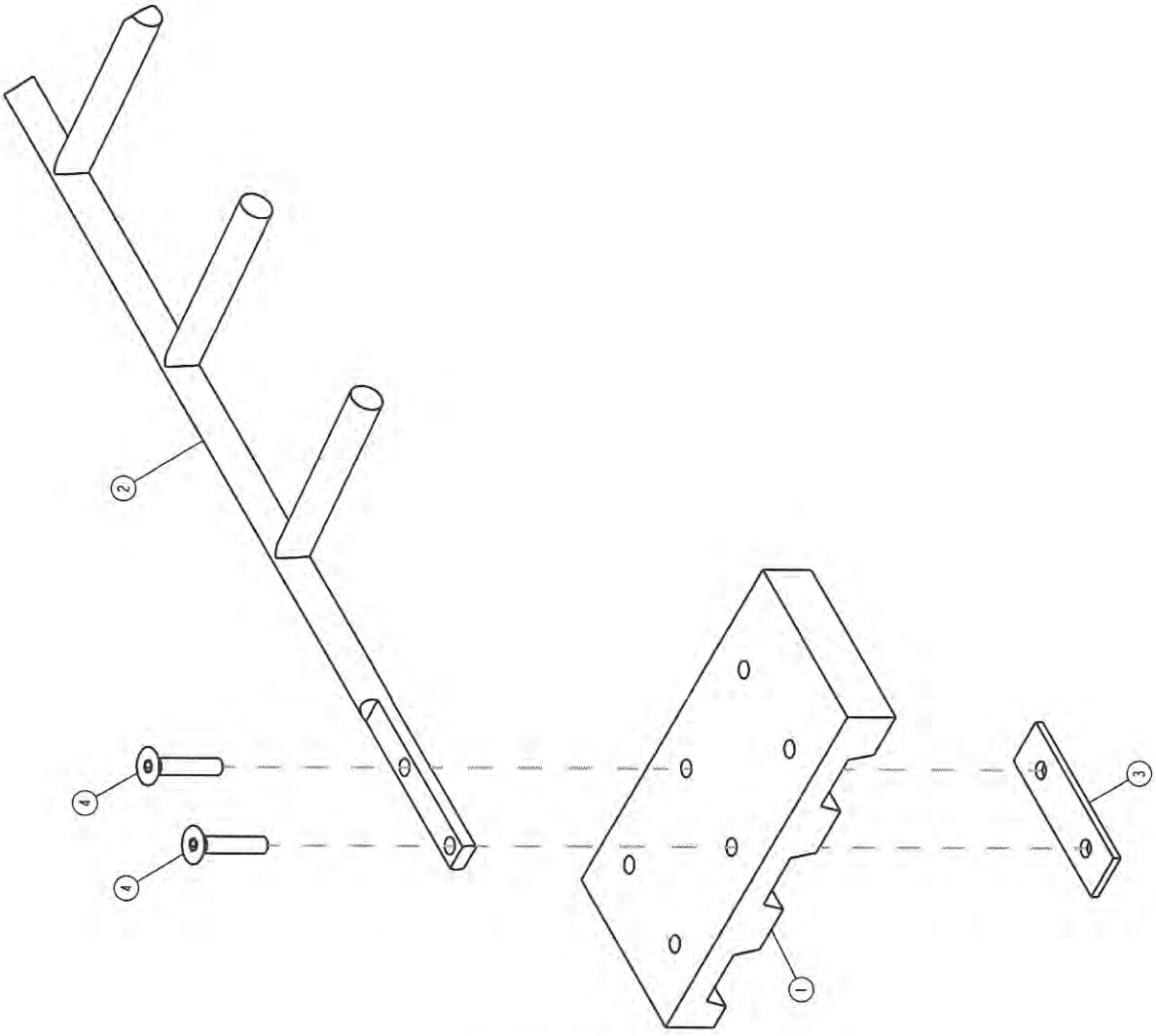
2
4
4
3
1

0354 - ROD REPLACEMENT - 19-3/4" SANDWICH

ITEM	PART NUMBER	DESCRIPTION	QTY SHOWN	QTY REQ'D	COMMENTS
1	80562	BELT, SECTION	1		
2	80562A	ROD, 19-3/4" BELT & BAR	1		
3	80574B	PLATE, 5MM BACKING	1		
4	80574E	BOLT, M5 X 25	2		

5
2
6
1
4
3

CONVERSION KIT FROM STANDARD SANDWICH TO VIRGINIA SANDWICH - 70968

ITEM	PART NUMBER	DESCRIPTION	QTY SHOWN	QTY REQ'D	COMMENTS
1	80562	SANDWICH BELT, PINS	1		
2	80638A	ROD, DOWN TURN	37	38	
3	80638B	ROD,CONNECTING;11 X 19-3/4 B-TYPE	1		
4	80638C	COVER, ROD; 13MM CUSHION	1	1.31 FT	
5	80638D	10-32 X 5/8 HEX HEAD BOLT	2	152	
6	80638E	PLATE, 5MM BACKING	1	76	

DIRECTION
OF
TRAVEL
1
2
3
4
5
6
7
8
9
10
11
12
13
14

ADI-436 & 438 TENTING INVERSION KITS

ITEM	PART NUMBER	DESCRIPTION	QTY SHOWN	QTY REQ'D	COMMENTS
1	3253	BEARING, 1.7/16" 4-H; TRIPLE LIP	1		
2	5581	SPROCKET, 60B36 F1-7/16	1		
3	61993	ROD, TENTING; #1 RT	2		
4	61994	ROD, TENTING, #2 RT	2		
5	61995	ROD, TENTING, #3 RT	2		
6	61996	ROD, TENTING; #4 RT	2		
7	62000	ROD, TENTING; #1 LFT	2		
8	62001	ROD, TENTING; #2 LFT	2		
9	62002	ROD, TENTING; #3, LFT	2		
10	62003	ROD, TENTING; #4 LFT	2		
11	94244	MOUNT, INVERTER ROD; 4 ROW 72	1		-- NOTE 1 --; ADI-436; KIT 70799
12	94283	MOUNT, TENTING ROTOR	2		
13	94284	BRACKET, TENTING ROD MOUNT SUPPORT	1		
14	S61973-2	ROTOR, TENTING 4-ROW-36"	1		-- NOTE 2 --; ADI-436; KIT 70799

-- NOTE 1 --			
94243	MOUNT, INVERTER ROD; 4 ROW 76	1	ADI-438; KIT 70800
-- NOTE 2 --			
S61974-2	ROTOR, TENTING; 4-ROW-38"	1	ADI-438; KIT 70800

ASSEMBLY NOTES:

- PLACE ONE END CAP [127235] ON ROTOR SHAFT USING 1-1/4 LG X 3/8-16 BOLTS [G180124].
- ADD ALL SPACERS AND DISCS IN PATTERN SHOWN.
- USE 2-1/2" LG X 3/8-16 OR LONGER BOLTS THROUGH SECOND END CAP [127235] TO TIGHTEN & COMPRESS SPACERS/DISCS. TIGHTEN UNTIL METAL PLATE HITS END OF TUBING. IF NECESSARY, USE SPACERS 2093 TO COMPENSATE.
- AFTER COMPRESSION, REPLACE LONG BOLTS WITH 1-1/4 LG X 3/8-16.

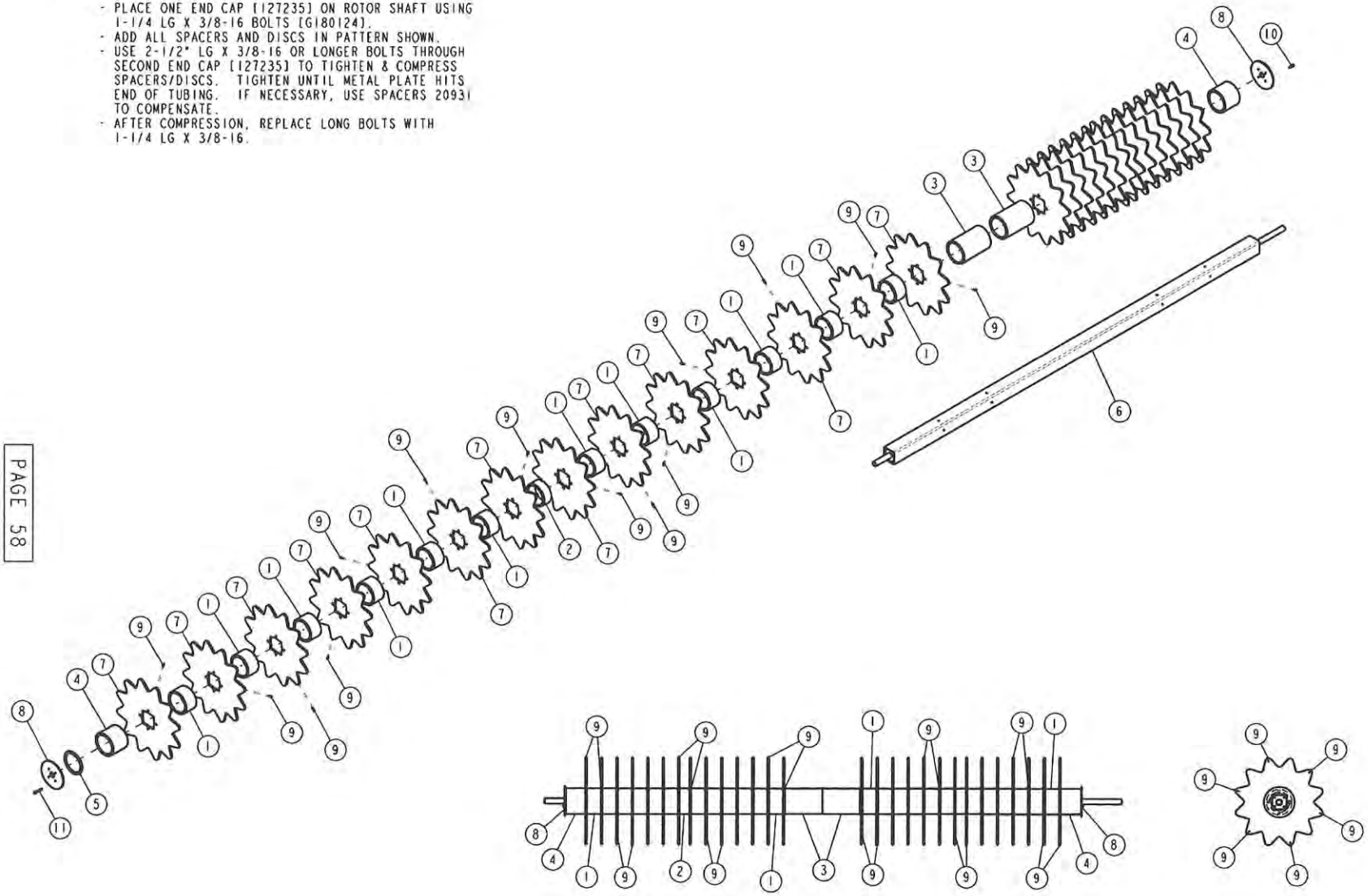

NOTE: DRILL 1/8" PILOT HOLE THEN ATTACH (1) G144858 AT EACH DISC SKIPPING ONE POINT WHEN MOVING TO NEXT DISC. (SEE ILLUSTRATION).

ADI-436 INVERTER ROTOR ASSEMBLY - TENTING

ITEM	PART NUMBER	DESCRIPTION	QTY SHOWN	QTY REQ'D	COMMENTS
1	20751	SPACER, 3.5/8; INVERTER ROTOR	24		
2	20849	SPACER, 2-9/16; INVERTER ROTOR	2		
3	20852	SPACER, 9-25/32; INVERTER ROTOR	2		
4	20855	SPACER, INVERTER ROTOR; 5-1/4	2		
5	20931	SPACER, 3/16"; INVERTER ROTOR	1	A/R	
6	61973	ROTOR SHAFT ASM, 4 ROW 36	1		
7	80498	DISC, URETHANE; 23.1/2" DIA.	28		
8	127235	CAP, INVERTOR ROTOR	2		
9	G144858	SCREW, #14 X 1 ZINC PLATED HEX WASHER HEAD SELF-DRILLING	28		
10	G180124	SCREW, 3/8-16 X 1-1/4 USS CAP	1	8	
11	G180134	SCREW, 3/8-16 X 2-1/2 USS CAP	1	4 OR A/R	

ASSEMBLY NOTES:

- PLACE ONE END CAP [127235] ON ROTOR SHAFT USING 1-1/4 LG X 3/8-16 BOLTS [GI80124].
- ADD ALL SPACERS AND DISCS IN PATTERN SHOWN.
- USE 2-1/2" LG X 3/8-16 OR LONGER BOLTS THROUGH SECOND END CAP [127235] TO TIGHTEN & COMPRESS SPACERS/DISCS. TIGHTEN UNTIL METAL PLATE HITS END OF TUBING. IF NECESSARY, USE SPACERS 20931 TO COMPENSATE.
- AFTER COMPRESSION, REPLACE LONG BOLTS WITH 1-1/4 LG X 3/8-16.

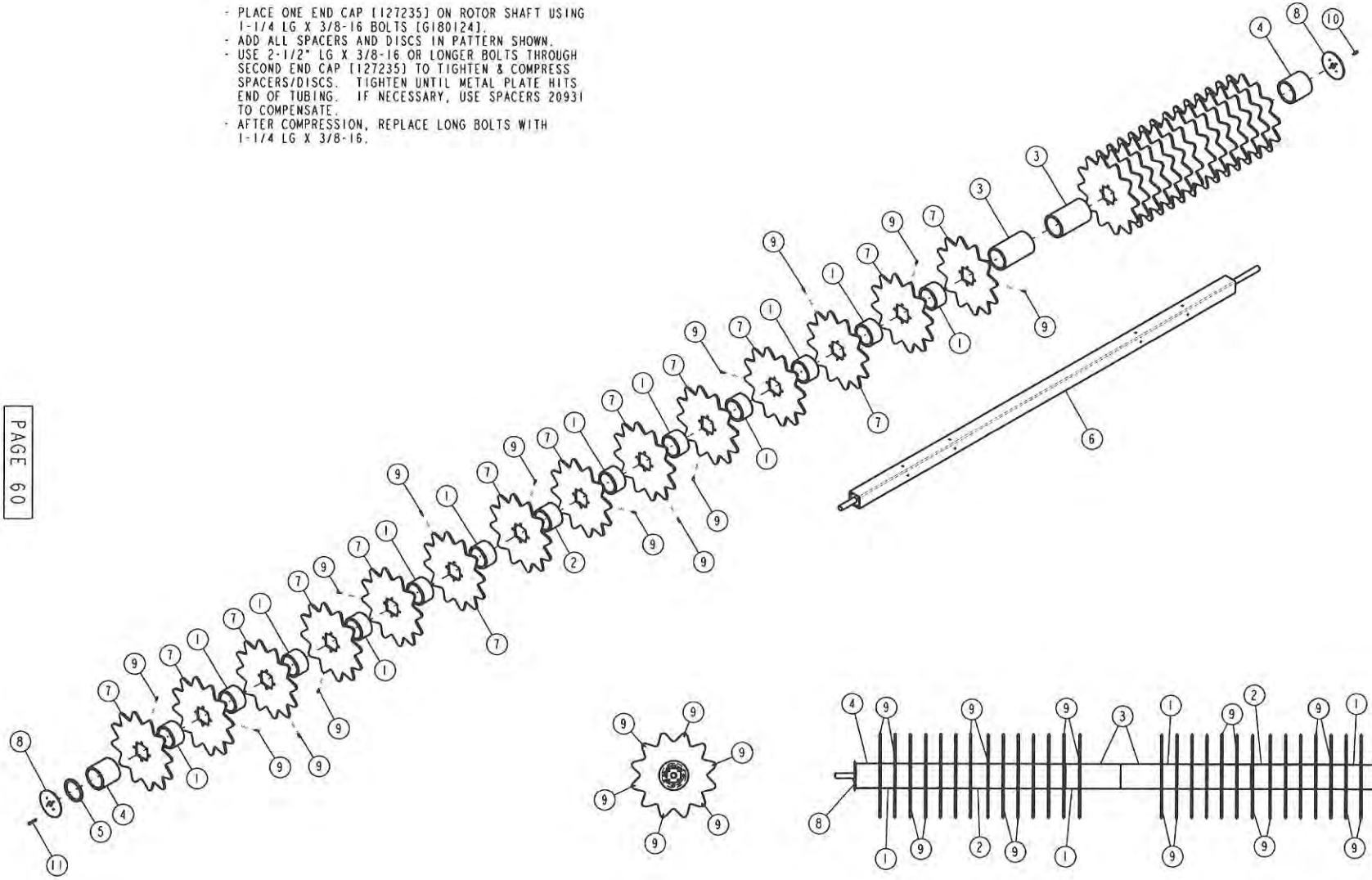

NOTE: DRILL 1/8" PILOT HOLE THEN ATTACH (1) GI44858 AT EACH DISC SKIPPING ONE POINT WHEN MOVING TO NEXT DISC. (SEE ILLUSTRATION).

ADI-438 INVERTER ROTOR ASSEMBLY - TENTING

ITEM	PART NUMBER	DESCRIPTION	QTY SHOWN	QTY REQ'D	COMMENTS
1	20751	SPACER, 3.5/8; INVERTER ROTOR	24		
2	20853	SPACER, 4-3/8; INVERTER ROTOR	2		
3	20856	SPACER, 10-27/32; INVERTER ROTOR	2		
4	20857	SPACER, 6-1/4; INVERTER ROTOR	2		
5	20931	SPACER, 3/16"; INVERTER ROTOR	1	A/R	
6	61974	ROTOR, INVERTER; 4-ROW 76	1		
7	80498	DISC, URETHANE; 23.1/2" DIA.	28		
8	127235	CAP, INVERTOR ROTOR	2		
9	G144858	SCREW, #14 X 1 ZINC PLATED HEX WASHER HEAD SELF-DRILLING	28		
10	G180124	SCREW, 3/8-16 X 1-1/4 USS CAP	1	8	
11	G180134	SCREW, 3/8-16 X 2-1/2 USS CAP	1	4 OR A/R	

4-ROW DIGGER KIT IDENTIFICATION CHART

Machine Type		
ADI-436	4-row digger/inverter for 36" row spacing	
ADI-438	4-row digger/inverter for 38" row spacing	
Inverter Type		
		Suffix
70840	Twin V for **436**	**A**
70844	Straight for **436**	**B**
70848	Twin V/Sandwich for **436**	**C**
70799	Tenting for **436**	**D**
70841	Twin V for **438**	**A**
70845	Straight for **438**	**B**
70849	Twin V/Sandwich for **438**	**C**
70800	Tenting for **438**	**D**
Plow Type		
70754	**37/18/42** Single Shank	**A**
70755	**40/20/46** Single Shank	**B**
70756	**45/23/V** V Shank Center	**C**
70760	**45/18/V** V Shank Center	**D**
Optional Coulter Type		
80464	Single Coulter	**A**
S61982-1	Double Coulter	**B***
	*Double coulters not available for Kits 70756 and 70760	
	Sample Machine ID number: **ADI-438ADA** indicates a 4-row 38" row spacing digger/inverter with a Twin V inverter, a 70760 V shank center plow, and a single optional coulter	

NUMERICAL PARTS INDEX

PART NO.	PAGE
1465	3
1825	49
1836	3,43
1841	5
1848	3
2015	41
2020	5,13,15,49
2212	3
2244	3
2246	41
3005	47,49
3093	15,47,49
3096	15,47,49
3253	13,21,25,57
4978	13
5122	15,21,25
5198	47
5581	21,25,57
5914	13
8182	45
8189	45
8190	45
8191	45
8547	45
10831	13
10927	3
10928	13
10929	13
10930	13
10931	13
10936	13
10939	49
10940	47
10950	15
10951	15
10952	15
10953	3
11375	3
11377	17,19
11379	47
13661	3
14936	63
15465	29
15468	29
15929	63
15930	63
16334	63
16942	29
20289	13
20592	15
20751	23,27,59,61
20798	3
20829	15
20830	5,49
20845	3
20846	33
20849	23,59
20852	23,59
20853	27,61
20855	23,59
20856	27,61
20857	27,61
20874	13
20877	47
20888	35,37
20895	49
20896	47
20915	3
20931	23,27,59,61
20937	17,19
20938	17,19
20939	17,19
20957	13
51002	15
51079	13,15
51661	13
51663	13
51691	13
51692	5
51695	13
51699	49
51700	49
61728	31,35,37
61730	31,35,37
61777	33,35,37
61778	33,35,37
61931	21,25,47
61948	31,33,35,37
61949	15
61950	15
61951	15
61952	15
61953	15
61954	15
61955	15
61956	15
61957	15
61958	15
61959	21,25
61960	21,25
61961	21,25
61962	21,25
61963	21,25
61964	21,25
61965	21,25
61966	21,25
61967	21,25
61968	21,25
61969	21,25
61970	21,25
61973	23,59
61974	27,61
61979	31,33,35,37
61982	41
61983	41
61984	41
61993	57
61994	57
61995	57
61996	57
62000	57
62001	57
62002	57
62003	57
62037	15
62038	15
62099	15
62100	15
70829	5
70830	5
70968	49
71183	5
80408	29
80449	23,27
80455	5
80458	3
80464	31,33,35,37
80466	45
80468	45
80471	45
80473	45
80475	3
80491	5,13,49
80498	17,19,23,27
80498	59,61
80499	33,35,37
80500	31,33,35,37
80501	31,33,35
80501	37,41
80502	31,33,35,37
80522	5,7,11
80523	5,7,9
80525	13
80530	5
80531	5
80548	45
80549	45
80562	49,51,53,55
80572	3
80573	7
80589	45
80603	45
80638	49
80640	3
80641	13
80721	5
93692	31,35,37
93693	31,35,37
93801	5
93819	3
94002	31,33,35,35
94148	3
94155	3
94195	3

NUMERICAL PARTS INDEX

PART NO.	PAGE
94196	3
94220	3
94221	3
94226	31,33,35,37
94230	31,33,35,37
94232	33,35,37
94233	31
94237	31
94240	5
94241	21,25
94243	25,57
94244	21,57
94247	3
94252	21,25
94256	43
94258	43
94272	47
94273	47
94276	49
94277	3
94279	47
94281	49
94283	57
94284	57
94336	47
94344	3
94348	31,35,37
94349	31,35,37
94350	35,37
94351	35,37
94455	17,19
94466	33
94467	33
94468	33
94469	33
94470	33
94471	33
94481	15
94482	15
94484	15
94485	15
94486	15
94487	15
121106	3
127235	23,27,59,61
127895	5
127897	5
127898	5
127917	35,37
127918	33
127919	33
127920	31,35,37
127921	31,35,37
127926	35,37
127927	35,37
127928	5
127929	5
127933	5
127934	5
127940	35,37
127941	35,37
127942	33
127943	33
127944	31
127945	31
127946	35,37
127947	35,37
127953	3
127961	13
127966	35
127967	37
127968	31
127969	31
127970	33
127971	33
127972	5
127974	35
127975	35
127976	37
127977	37
127991	21,25,47
127995	5
127996	13
127997	13
127998	13
127999	13
128000	13
128001	13
128005	15
128006	13
128009	21,25,47
128019	49
128020	49
128021	49
128022	49
128032	49
128070	47
128087	41
128116	49
128117	49
128118	5
128137	15
128138	15
128139	15
128140	15
128150	15
128151	15
128152	15
128153	15
128155	21,25
128156	21,25
128168	15
128169	15
128170	15
128177	15
128178	63
128179	63
128180	63
128303	17,19
128291	5
128304	17,19
129095	5
129096	5
140341	13
140506	13
140509	15,21,25
140545	13
140641	13
140644	13
140653	13
140672	13
11377A	15
11377B	15
11377C	15
11379A	47
11379B	47
11379C	47
15464C	29
4043-57	47
4043-83	21,25
4043-85	15
4293-18	3
4293-23	3
4293-39	3
4293-5	3
4365D-129	13
80113B	3
80464A	39,41
80464B	39
80464B	41
80464C	39
80464D	39,41
80464E	39,41
80464F	39,41
80464G	39,41
80464H	39,41
80464J	39,41
80464K	39,41
80464L	39,41
80464M	31,33,35,37
80464Q	39
80522A	11
80522C	7
80522E	7
80522F	7
80522G	9,11
80522H	9,11
80522K	7
80522L	7,51
80522M	7,51
80522N	7,51
80523A	9
80562A	53
80569A	3

NUMERICAL PARTS INDEX

PART NO.	PAGE
80574B	53
80574C	51
80574D	51
80574E	53
80638A	55
80638B	55
80638C	55
80638D	55
80638E	55
80B24-1-4	13
80Q45	13
92856D	3
94352_INV_CAT	47
G1010536	31
G101536	31,33,35,37
G1015639	35
G101637	47
G101639	31,33,35,37
G102887	31,33,35,37
G102894	47
G102924	17,19
G110456	33,35,37
G11500721	13
G120238	33,35,37
G120240	5,49
G120378	13
G120382	17,19
G120384	3,13
G120394	49
G120915	47
G120916	41
G121358-8	31,33,35,37
G121574	5
G124589	5,49
G124590	5,49
G124818	3
G124820	5
G124829	47
G126178	63
G126227	49
G126358	31,33,35,37
G126370	35,37
G128001	31,33,35,37
G128002	31,33,35
G128002	37,47,49
G128004	31,33,35
G128004	37,47
G131015	15,49
G131016	5,49
G131017	41
G131021	3
G131090	49
G139454	15,19,19
G144858	17,19,23
G144858	27,59,61
G180024	63
G180077T	47
G180079	47
G180085	3
G180122	17,19
G180124	17,19,23
G180124	27,59,61
G180134	23,27,59,61
G180188	31,33,35,37
G180193	47
G181698	3
G189307	49
G220086	39,41
G271509	15,17,19
G271723	5
G271727	49
G271729	49
G271735	49
G271775	39,41
G271953	3
G272325	3
G431798	3,47
G433163	33,35,37
G451800-8	13
G451802-8	31,33,35,37
G9419533	3
G9413441	5
J38H1163	13
J38H1317	13
JAH116104	13
JH104418	13
S127966	35
S127967	37
S127968	31
S127969	31
S127970	33
S127971	33
S127974	35
S127975	35
S127976	37
S127977	37
S129095	5
S15569-24	29
S61973-1	21
S61973-2	57
S61974-1	25
S61974-2	57
S61982-1	31,33
S62442	5
S80499	31
S94230	31,33,35,37
S94276LT	47
S94276RT	47
S94454	15
S94455	15

PART NO.	PAGE

ONE-YEAR LIMITED WARRANTY
For AMADAS INDUSTRIES DIGGER / INVERTERS

A. General Provisions

The Warranties described below are provided by AMADAS INDUSTRIES ("AMADAS") through its authorized dealers to the original purchaser of each new AMADAS Digger / Inverter. AMADAS will repair or replace, at its option, any part covered under warranty which is found to be defective in material or workmanship during the applicable period of warranty. This warranty is applicable only to the cost of the part replaced or repaired and does not cover labor costs involved in installing the replaced or repaired defective part.

B. What is Warranted?

All parts of any new AMADAS Digger / Inverter are warranted for 12 months. The warranty period will begin when the Digger / Inverter is delivered to the purchaser. AMADAS will repair or replace, at its option, any new part or component under the above warranty, if a defect in material or workmanship appears in such part or component and is reported to AMADAS before the expiration of the applicable equipment warranty.

Used equipment is not warranted by AMADAS unless it is specifically covered by a separate warranty document. The above warranties cover only defective material and workmanship. The warranties do not cover any depreciation or failure caused by normal wear, lack of proper maintenance or use, misuse, lack of proper protection during storage, or accident. The purchaser shall pay all costs of routine maintenance and/or replacement of maintenance and wear items.

C. Unapproved Service or Modification

All Obligations of AMADAS under this warranty are terminated if the Digger / Inverter is modified or altered in ways not approved by AMADAS.

D. Securing Warranty Service

To secure warranty service, the purchaser must (1) report the product defect and request repair within the applicable warranty period, (2) present evidence of the date of delivery of the Digger / Inverter, and (3) make the Digger / Inverter available to an AMADAS authorized dealer within a reasonable period of time.

E. No Dealer Warranty

The selling dealer makes no warranty of his own on any item warranted by AMADAS, and makes no warranty on other items. The dealer has no authority to make any representation or promise on behalf of AMADAS, or to modify the terms or limitations of this warranty in any way.

F. What are your Responsibilities?

a. Read the operator's manual before operating the equipment.
b. Perform all necessary maintenance as described in the operator's manual.
c. Deliver the machine to an AMADAS authorized dealer at your expense during normal working hours for any needed warranty services.
d. Contact an AMADAS authorized dealer promptly on any claim for warranty service.
e. Sign the AMADAS machinery delivery form, which will be given to you by the dealer.

G. Disclaimer

There are no warranties that extend beyond the description here. **ANY WARRANTIES OF MERCHANTABILITY AND FITNESS FOR ANY PARTICULAR PURPOSE ARE SPECIFICALLY DISCLAIMED AS ARE ALL OTHER REPRESENTATIONS TO THE PURCHASER.** AMADAS specifically excludes any liability on behalf of the company for any incidental or consequential damages including, but not limited to, crop loss, loss of profits, rental of substitute equipment, or other commercial losses. AMADAS shall not be responsible for expenses or inconveniences that you might incur or experience with respect to the AMADAS Digger / Inverter nor shall AMADAS be liable for defects, damage, or failures caused by improper storage, unreasonable use, or abuse, or accident, including the failure to provide reasonable and specified maintenance. This warranty applies only to the original purchaser of the equipment. Because some states do not allow the exclusion of limitations of incidental or consequential damages, the above limitation may not apply to you. This warranty gives you specific legal rights. You may also have other rights, which vary from state to state. Where there is a conflict between a provision of this warranty and the provision of any state, the state legislation prevails.

AMADAS